# S.T.G. Germany GmbH

GÜNTHER®

## PRODUCT RANGE

Reed Switches
High Voltage Relays
DIL-SIL-Reed Relays
Non-Mercury Tilt Switches
Reed Sensors
Automotive Sensors
Liquid Level Sensors
Acceleration Sensors
Seat Position Sensors
Proximity Sensors
Inclination Sensors

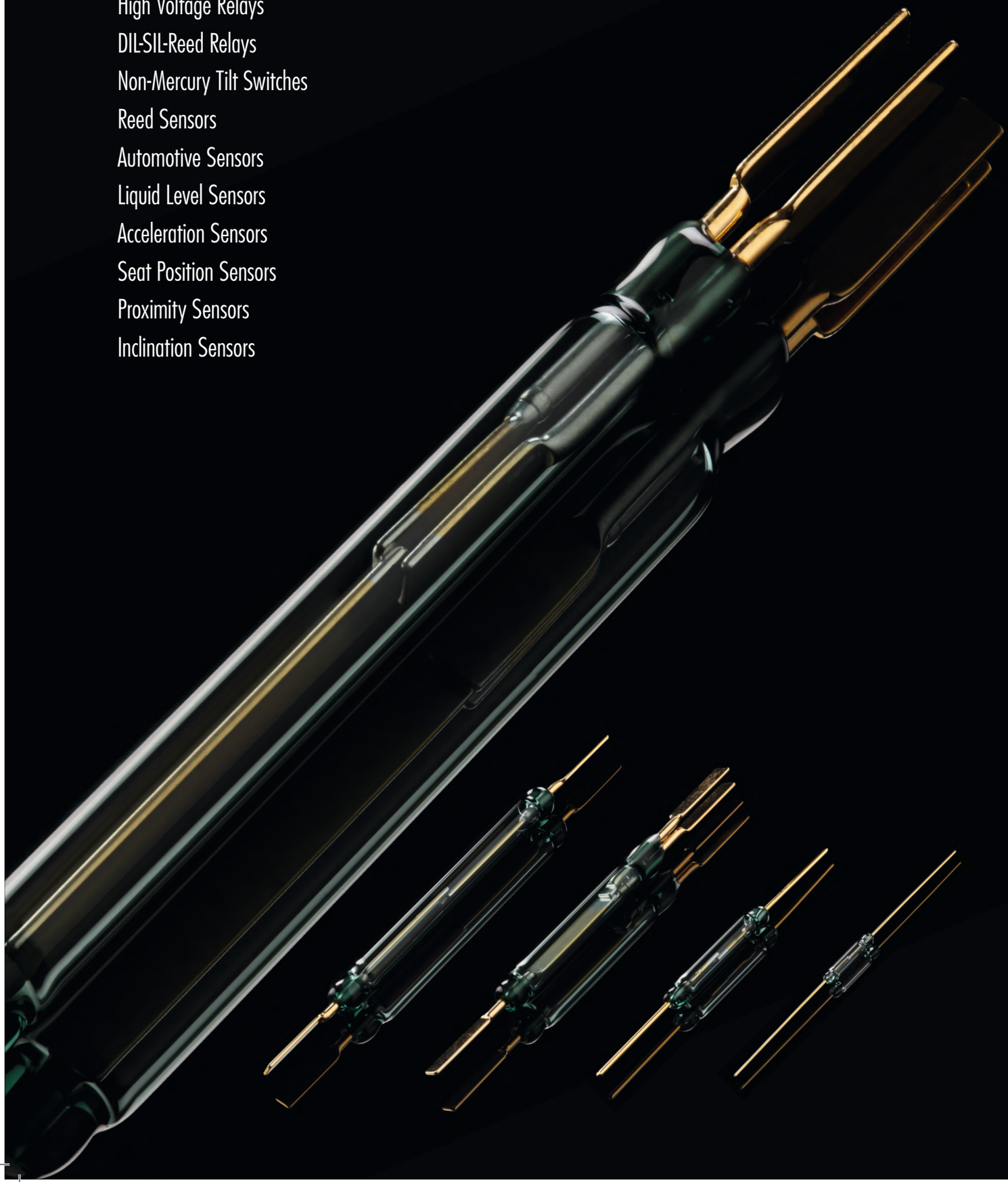

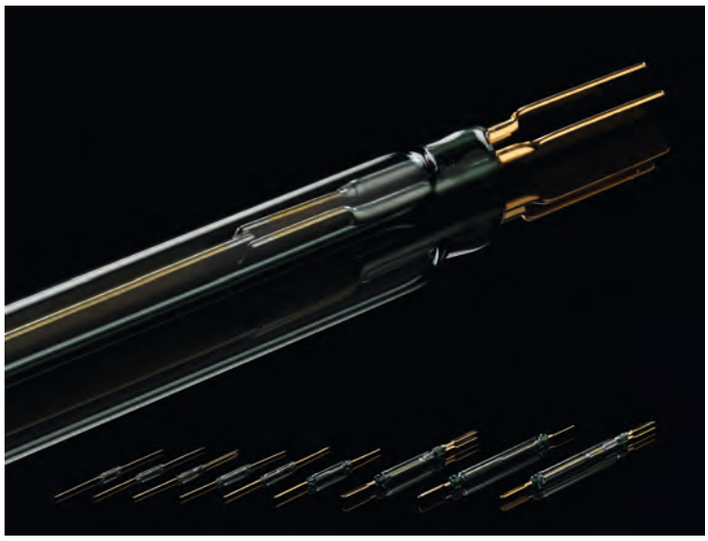

## Reed Switches

The quality of our Reed Switches meets the very high international standards.
The variety of the Reed Switch types and the state-of-the-art development enable us to cover almost all industrial applications and specifications.

Our product range is complemented by the Reed Switches of M/S OKI Sensor Device Corporation, with whom we have an „International Distributor Agreement“.

Our Reed Switches are available as normally-open, normally-closed mounted with biasing magnet or bistable versions.

The scope of implementing Reed Switches is far-ranging. Especially when developing new custom applications, there may be the necessity to adapt the Reed Switch geometry to special assembly situations.


By extending, cutting, bending or combinations thereof we gain the ability to customize the Reed Switch lead-outs to meet individual customer requirements.

Since the use of SMT is intensifying especially in industrial applications, our product range also includes SMD and moulded Reed Switches with common connectivity.

For use in automated mounting machines the SMD Reed Switches are also available in Tape & Reel packaging.

**Page 4 - 11**

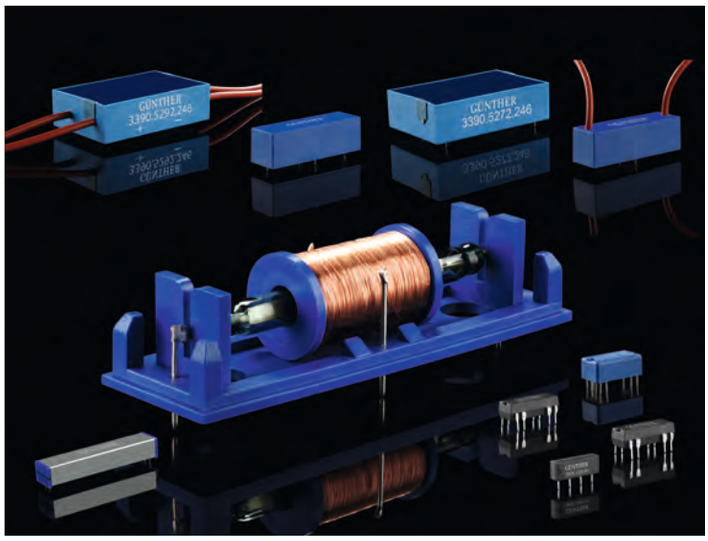


## High Voltage Reed Relays

Our High Voltage Reed Relays have outstanding performance characteristics in insulation resistance and stand-off voltage and thus find application in many electronic and electrotechnical areas.

**Page 12 - 18**

## Reed Relays

A wide range of standard Reed Relays and our know-how to develop customer specific Reed Relays allows us to find a solution for almost every application requirement.

**Page 19 - 23**

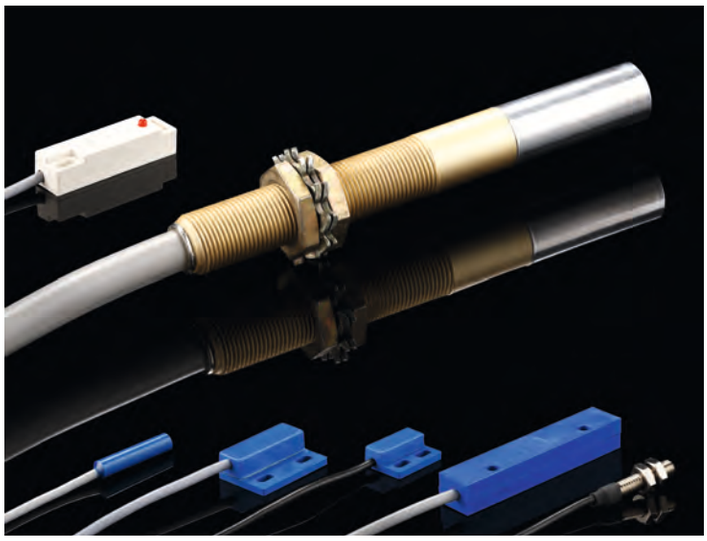

## Proximity Sensors

Proximity Sensors are based on Reed Switches which are actuated without direct physical contact.
The switching operation is generally triggered by the approach respectively by the removal of a magnetic field.

Proximity Sensors are used in technical processes for position detection of objects and tools, or as signal source for security measures.

Proximity Sensors are implemented when mechanical limit switches are unsuitable due to adverse operating conditions, and when other non-contact switches such as inductive and capacitive sensors are too expensive.

Aside the very good cost/performance ratio our Proximity Sensors stand out due to their multi-purpose applicability. This is obtained by the use of various housing types in combination with diverse connectivity.

Individual solutions can be designed according to customer specifications.

**Page 24 - 25**

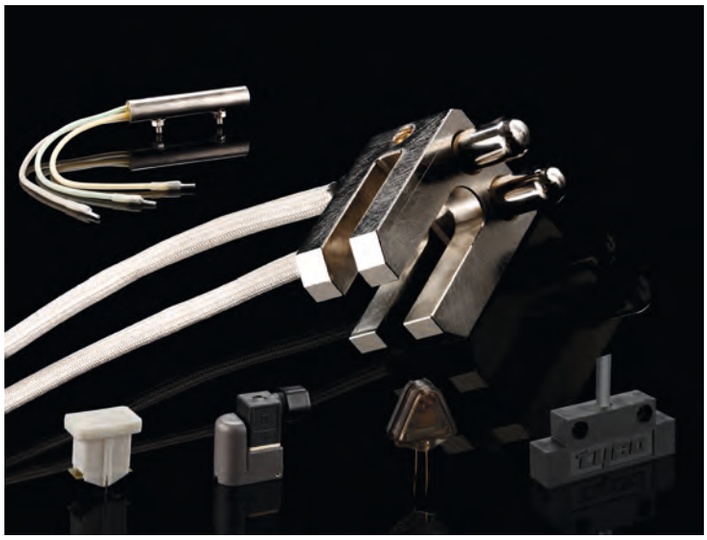

## Pendulum / Inclination Sensor

The Pendulum / Inclination Sensor for the measurement of angles enables differential angles above 2°. The Sensor's repetitive accuracy allows its use for very high precision requirements. The patented Sensor replaces former mercury solutions and is used in the automotive industry as well as in other fields of industry and engineering.

**Page 26 - 27**

## Automotive Sensor / ABS Sensor

The Automotive Sensor / ABS Sensor is designed utilizing several Pendulum Sensors. When the preset acceleration is exceeded the Pendulum with the fixed magnet deflects and activates the Reed Switch.
The Sensor can be adjusted for accelerations above 0,1g. Other customer specific Automotive Sensors, such as Door Lock Sensors and the like can also be designed.

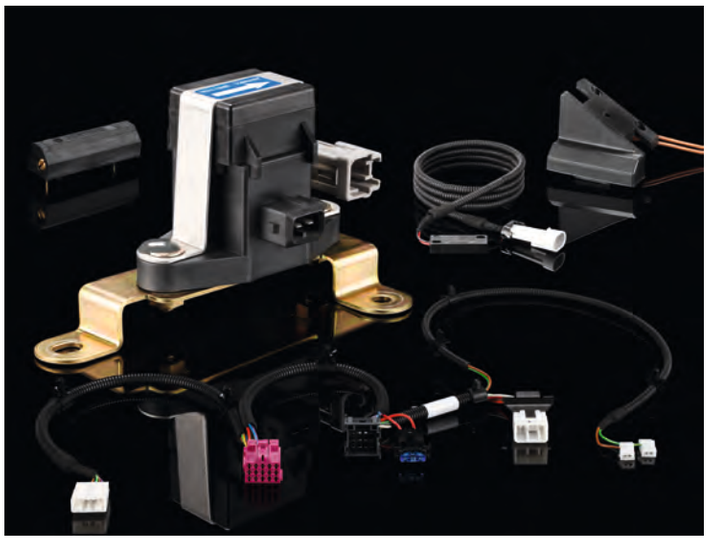

## Acceleration Sensor / Crash Sensor

The Acceleration Sensor / Crash Sensor can detect axial accelerations with an adjustable response value beyond a prespecified g-force (multiple gravitational acceleration). When the prescribed acceleration is exceeded a flying magnet passes a Reed Switch triggering contact.
Typical automotive applications include airbag and seatbelt systems. The Acceleration Sensor can be adjusted for accelerations above 2g to meet preselected customer acceleration requirements as well as other design/package specifications.

## Contact Protection

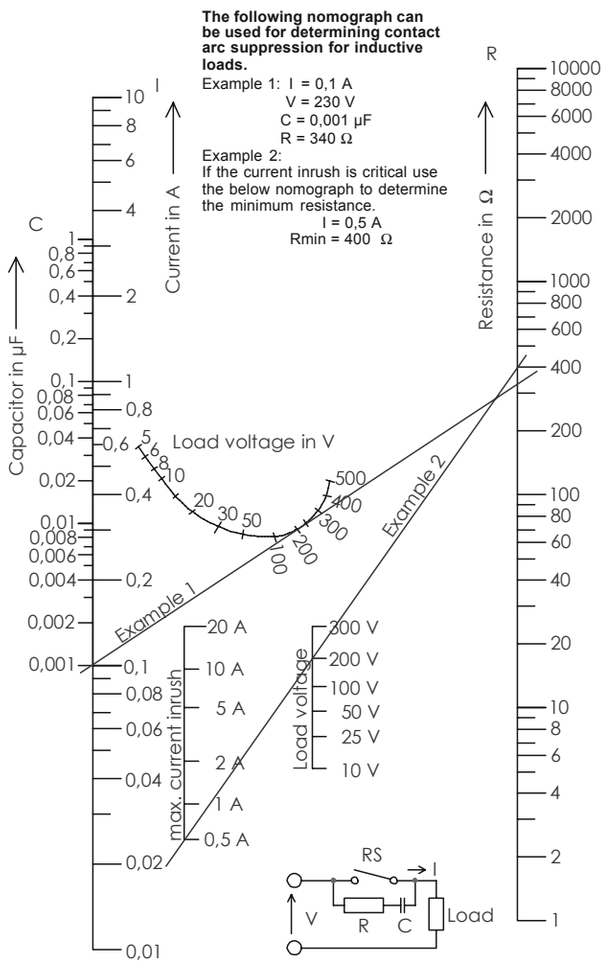


## Capacitive Loads

Unlike inductive loads, capacitive and lamp loads are prone to high inrush currents which can lead to faulty operation and even contact welding.
When switching charged capacitors (including cable capacitance) a sudden unloading can occur, the intensity of which is determined by the capacity and length of the connecting leads to the switch. This inrush peak can be reduced by a series of resistors. The value of these resistors is dependent on the particular application but should be as high as possible to ensure that the inrush current is within the allowable limits.

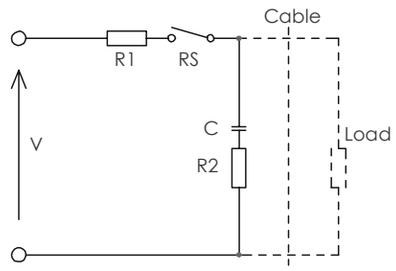


The above diagram illustrates a resistor/capacitor network for protecting a Reed Switch against high inrush currents. R1 and/or R2 are used depending upon circuit conditions.

With lamp load applications it is important to note that cold lamp filaments have a resistance 10 times smaller than already glowing filaments. This means that when being turned on, the lamp filament experiences a current flow 10 times greater than when already glowing. This high inrush current can be reduced to an acceptable level through the use of a series of current-limiting resistors. Another possibility is the parallel switching of a resistor across the switch. This allows just enough current to flow to the filament to keep it warm, yet not enough to make it glow.

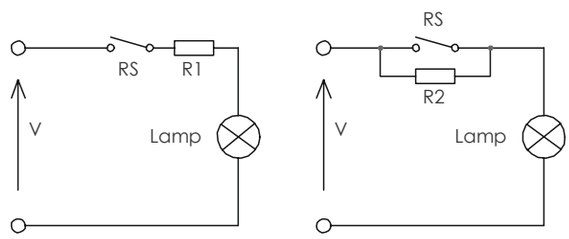


Lamp load with parallel or current limiting resistor across the switch

UL and CSA listed

| | | | NORMALLY OPEN | | | | | | | | |
|---|---|---|---|---|---|---|---|---|---|---|---|
| | | | SMD | | MOULDED | | MICROMINIATURE | | | | |
| | | S.T.G. Type | 5213 | 5228 | 6213 | 6228 | 0213 | 0311 | 0211 | 0312 | 0219 |
| **Parameters** | | OKI Type | ORD213S-1 | ORD228S-1 | RA-903 | RA-901 | ORD213 | ORD311 | ORD211 | ORD312 | ORD219 |
| Contact form | | | A | A | A | A | A | A | A | A | A |
| Contact material | | | Rh | Rh | Rh | Rh | Rh | Ir | Rh | Ir | Rh |
| Switching capacity | max. | W/VA | 1 | 10 | 1 | 10 | 1 | 10 | 1 | 30 | 10 |
| Switching voltage | max. | V AC/DC | 24 | 100 | 24 | 100 | 24 | 100 | 24 | 100 | 100 |
| Switching current | max. | A | 0,1 | 0,5 | 0,1 | 0,5 | 0,1 | 0,5 | 0,1 | 0,5 | 0,5 |
| Carrying current | max. | A | 0,3 | 1,0 | 0,3 | 1,0 | 0,3 | 1,0 | 0,3 | 1,0 | 1,0 |
| Dielectric strength | min. | VDC | 150 | 150 | 150 | 200 | 150 | 250 | 150 | 250 | 200 |
| Contact resistance | max. | mΩ | 200 | 100 | 200 | 100 | 200 | 200 | 100 | 100 | 100 |
| Insulation resistance | min. | Ω | $10^9$ | $10^9$ | $10^9$ | $10^9$ | $10^9$ | $10^9$ | $10^9$ | $10^9$ | $10^9$ |
| Pull-in sensitivity | | AW | 10…40* | 10…40* | 16…46* | 16…49* | 10…40 | 10…40 | 10…40 | 10…40 | 10…40 |
| Drop-out sensitivity | min. | AW | 5 | 5 | 10 | 10 | 5 | 5 | 5 | 5 | 5 |
| Switching time without bounce | max. | ms | 0,3 | 0,4 | 0,3 | 0,4 | 0,3 | 0,3 | 0,3 | 0,4 | 0,4 |
| Bounce time | max. | ms | 0,3 | 0,3 | 0,3 | 0,3 | 0,3 | 0,3 | 0,3 | 0,3 | 0,3 |
| Release time | max. | ms | 0,05 | 0,05 | 0,05 | 0,05 | 0,05 | 0,05 | 0,05 | 0,05 | 0,05 |
| Resonant frequency | typ. | Hz | 11000 | 5000 | 13000 | 5400 | 11000 | 13000 | 7500 | 5900 | 5900 |
| Operating frequency | max. | Hz | 500 | 500 | 500 | 500 | 500 | 500 | 500 | 500 | 500 |
| Vibration | 20 g | Hz | 10-1000 | 10-1000 | 10-1000 | 10-1000 | 10-1000 | 10-1000 | 10-1000 | 10-1000 | 10-1000 |
| Shock | 11 ms | g | 30 | 30 | 30 | 30 | 30 | 30 | 30 | 30 | 30 |
| Capacitance | typ. | pF | 0,4 | 0,3 | 0,4 | 0,3 | 0,4 | 0,4 | 0,2 | 0,3 | 0,3 |
| Operating temperature range | | ˚C | -40 …+125 | | | | | | | | |
| Test coil | | Type | | | | | 0211 | 0211 | 0211 | 0221 | 0221 |
| **Features** | | | Super ultra miniature SMD | Miniature high performance SMD | Ultra miniature SMD | Miniature SMD | Super ultra miniature | Super ultra miniature, long life | Ultra miniature | High power, long life | Miniature high perfor-mance |
| **Dimensions** | | | | | | | | | | | |
| Total length A | max. | mm | 13,0 | 20,0 | 13,0 | 20,0 | 36,1 | 36,1 | 36,0 | 45,0 | 45,0 |
| Glass length B | max. | mm | 7,0 | 14,0 | 8,7 | 16,2 | 7,0 | 7,0 | 10,0 | 12,0 | 12,0 |
| Glass diameter C | max. | mm | 1,8 | 2,2 | 2,2 x 2,2 | 2,6 x 2,6 | 1,8 | 1,8 | 2,0 | 2,0 | 2,0 |
| Wire diameter D | max. | mm | 0,30 | 0,50 | 0,80 | 0,70 | 0,30 | 0,30 | 0,40 | 0,50 | 0,50 |

**Additional types on request**

* pre-forming

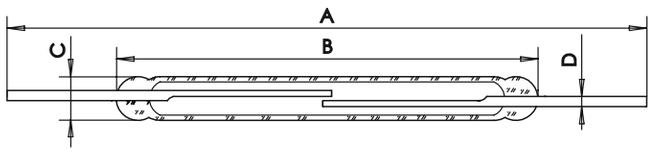


**Form A**

## Actuation of Reed Switches with a Permanent Magnet

**Examples of switching with the use of a moving magnet**

**Direct Actuation:**
A magnet moved perpendicularly towards and away from a Reed Switch turns it off and on one time.

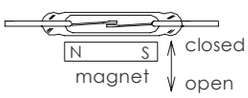


A magnet moved parallel to a Reed Switch operates it from one to three times.

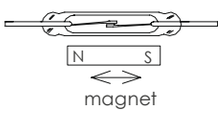


A ring magnet moved parallel to the Reed Switches axis operates it from one to three times.

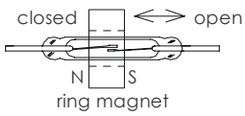


A magnet swung towards and away from a Reed Switch operates it one time.

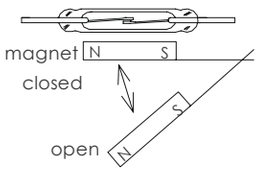

UL / CSA / ETL listed

| | | | NORMALLY OPEN | | | | | | | | |
|---|---|---|---|---|---|---|---|---|---|---|---|
| | | | MICROMINIATURE | | SUBMINIATURE | | | | | | |
| | | S.T.G. Type | 2522 | 2525 | 0221 | 0228 | 0324 | 2322 | 2325 | 2312 | 2315 |
| **Parameters** | | OKI Type | | | ORD221 | ORD228VL | ORD324 | | | | |
| Contact form | | | A | A | A (Off Set) | A | A | A | A | A | A |
| Contact material | | | Rh | Rh | Rh | Rh | Ir | Rh | Rh | Rh | Rh |
| Switching capacity | max. | W/VA | 6 | 6 | 10 | 10 | 10 | 10 | 10 | 10 | 10 |
| Switching voltage | max. | V AC/DC | 140 | 140 | 100 | 100 | 100 | 150 | 100 | 230 | 230 |
| Switching current | max. | A | 0,5 | 0,5 | 0,3 | 0,5 | 0,5 | 0,5 | 0,5 | 0,5 | 0,5 |
| Carrying current | max. | A | 0,8 | 0,8 | 1,0 | 1,0 | 1,0 | 1,0 | 1,0 | 1,0 | 1,0 |
| Dielectric strength | min. | VDC | 200 | 200 | 150 | 150 | 250 | 200 | 200 | 400 | 400 |
| Contact resistance | max. | mΩ | 150 | 150 | 100 | 100 | 100 | 150 | 150 | 150 | 150 |
| Insulation resistance | min. | Ω | $10^{10}$ | $10^{10}$ | $10^{9}$ | $10^{9}$ | $10^{10}$ | $10^{10}$ | $10^{10}$ | $10^{10}$ | $10^{10}$ |
| Pull-in sensitivity | | AW | 10…40 | 10…40 | 10…30 | 10…40 | 10…40 | 10…35 | 10…35 | 15…35 | 15…35 |
| Drop-out sensitivity | min. | AW | 5 | 5 | 5 | 5 | 4 | 5 | 5 | 5 | 5 |
| Switching time without bounce | max. | ms | 1,0 | 1,0 | 0,4 | 0,4 | 0,4 | 1,8 | 1,8 | 1,8 | 1,8 |
| Bounce time | max. | ms | 0,3 | 0,3 | 0,5 | 0,3 | 0,3 | 0,2 | 0,2 | 0,2 | 0,2 |
| Release time | max. | ms | 0,05 | 0,05 | 0,05 | 0,05 | 0,05 | 0,05 | 0,03 | 0,05 | 0,05 |
| Resonant frequency | typ. | Hz | 6000 | 6000 | 2750 | 5000 | 5000 | 5000 | 5000 | 5000 | 5000 |
| Operating frequency | max. | Hz | 400 | 400 | 500 | 500 | 500 | 200 | 200 | 200 | 200 |
| Vibration | 20 g | Hz | 35g/2000 | 35g/2000 | 10-1000 | 10-1000 | 10-1000 | 35g/2000 | 35g/2000 | 35g/2000 | 35g/2000 |
| Shock | 11 ms | g | 50 | 50 | 30 | 30 | 30 | 50 | 50 | 50 | 50 |
| Capacitance | typ. | pF | 0,5 | 0,5 | 0,3 | 0,3 | 0,3 | 0,7 | 0,7 | 0,7 | 0,7 |
| Operating temperature range | | °C | -40...+150 | | -40...+125 | | | -40...+150 | | | |
| Test coil | | Type | 1035 | 1035 | 0221 | 0221 | 0221 | 1035 | 1035 | 1035 | 1035 |
| **Features** | | | Miniature, high power | Miniature, close differential | Miniature, offset-type | Miniature, high per-formance, automotive | Miniature, general purpose | Miniature, general purpose | Miniature, general purpose close differential | Miniature, high power | Miniature, high power close differential |
| **Dimensions** | | | | | | | | | | | |
| Total length | A max. | mm | 55,0 | 55,0 | 45,0 | 45,0 | 45,0 | 55,0 | 55,0 | 55,0 | 55,0 |
| Glass length | B max. | mm | 11,0 | 11,0 | 13,0 | 14,0 | 14,0 | 14,1 | 14,1 | 14,1 | 14,1 |
| Glass diameter | C max. | mm | 2,1 | 2,1 | 2,3 | 2,2 | 2,2 | 2,3 | 2,3 | 2,3 | 2,3 |
| Wire diameter | D max. | mm | 0,40 | 0,40 | 0,35x0,6 | 0,50 | 0,50 | 0,50 | 0,50 | 0,50 | 0,50 |

**Additional types on request**

**Form A**

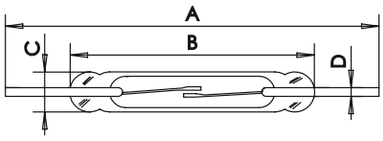


**Rotation:**
Examples of switching through rotational movement:

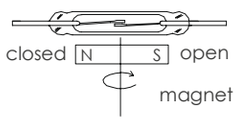


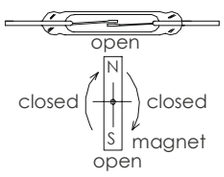


**Indirect Actuation: Shielding**
With the stationary arrangement of a Reed Switch and magnet, the contact blades are closed. Should the magnetic field be diverted away from the Reed Switch by a shield of ferro-magnetic material placed between the switch and the magnet, the contacts will open. When the shield is removed, the contact blades become magnetically actuated and close.

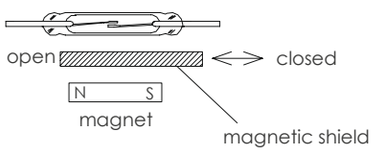

UL / CSA / ETL listed

| | | | NORMALLY OPEN | | | | | | | | |
|---|---|---|---|---|---|---|---|---|---|---|---|
| | | | SUBMINIATURE | | | | MINIATURE | | | | |
| | | S.T.G. Type | 2314 | 2317 | 2211 | 9215 | 2221 | 2722 | 2725 | 2715 | 2717 |
| **Parameters** | | OKI Type | | | ORD2211 | ORD9215 | ORD2221 | | | | |
| Contact form | | | A | A | A | A | A | A | A | A | A |
| Contact material | | | Rh | Rh | Rh | Rh | Rh | Rh | Rh | Rh | Rh |
| Switching capacity | max. | W/VA | 10 | 10 | 50 | 10 | 10 | 10 | 10 | 10 | 10 |
| Switching voltage | max. | V AC/DC | 400 | 470 | 100 | 100 | 100 | 230 | 230 | 350 | 500 |
| Switching current | max. | A | 0,5 | 0,5 | 0,5 in-rush 3A | 0,4 | 0,3 | 0,5 | 0,5 | 0,5 | 0,5 |
| Carrying current | max. | A | 1,0 | 1,0 | 2,5 | 1,0 | 1,0 | 1,0 | 1,0 | 1,0 | 1,0 |
| Dielectric strength | min. | VDC | 600 | 700 | 200 | 150 | 150 | 400 | 400 | 600 | 1000 |
| Contact resistance | max. | mΩ | 150 | 150 | 100 | 100 | 100 | 100 | 100 | 100 | 100 |
| Insulation resistance | min. | Ω | $10^{11}$ | $10^{11}$ | $10^{9}$ | $10^{9}$ | $10^{9}$ | $10^{11}$ | $10^{11}$ | $10^{11}$ | $10^{11}$ |
| Pull-in sensitivity | | AW | 15…35 | 15…35 | 20…40 | 10…50 | 10…30 | 20…50 | 20…50 | 20…50 | 20…50 |
| Drop-out sensitivity | min. | AW | 5 | 5 | 8 | 4 | 5 | 5 | 5 | 10 | 5 |
| Switching time without bounce | max. | ms | 1,8 | 1,8 | 0,6 | 0,4 | 1,0 | 2,0 | 2,0 | 2,0 | 2,0 |
| Bounce time | max. | ms | 0,2 | 0,2 | 0,4 | 0,4 | 1,0 | 0,5 | 0,5 | 1,0 | 0,5 |
| Release time | max. | ms | 0,05 | 0,05 | 0,05 | 0,05 | 0,05 | 0,10 | 0,10 | 0,10 | 0,10 |
| Resonant frequency | typ. | Hz | 5000 | 5000 | 4600 | 3700 | 2750 | 2900 | 2900 | 2900 | 2900 |
| Operating frequency | max. | Hz | 200 | 200 | 500 | 500 | 500 | 200 | 200 | 230 | 200 |
| Vibration | 20 g | Hz | 35g/2000 | 35g/2000 | 10-1000 | 10-1000 | 10-1000 | 35g/2000 | 35/2000 | 2000 | 2000 |
| Shock | 11 ms | g | 50 | 50 | 30 | 30 | 30 | 50 | 50 | 50 | 50 |
| Capacitance | typ. | pF | 0,7 | 0,7 | 0,3 | 0,3 | 0,3 | 0,5 | 0,5 | 0,5 | 0,5 |
| Operating temperature range | | ˚C | -40...+150 | | -40...+125 | | | -40...+150 | | | |
| Test coil | | Type | 1035 | 1035 | 0221 | 0221 | 0221 | 1700 | 1700 | 1700 | 1700 |
| **Features** | | | Miniature, high power | Miniature, high power | Lamp load | General purpose, miniature type | General purpose, offset | High power, wide differential | High power | High power | High breakdown voltage |
| **Dimensions** | | | | | | | | | | | |
| Total length | A max. | mm | 55,0 | 55,0 | 45,0 | 45,0 | 57,0 | 55,0 | 55,0 | 55,0 | 55,0 |
| Glass length | B max. | mm | 14,1 | 14,1 | 16,5 | 17,0 | 13,0 | 19,0 | 19,0 | 19,0 | 19,0 |
| Glass diameter | C max. | mm | 2,3 | 2,3 | 2,8 | 2,8 | 2,3 | 2,6 | 2,6 | 2,6 | 2,6 |
| Wire diameter | D max. | mm | 0,50 | 0,50 | 0,6 | 0,5 | 0,35x0,6 | 0,55 | 0,55 | 0,55 | 0,55 |

**Additional types on request**

## Form A

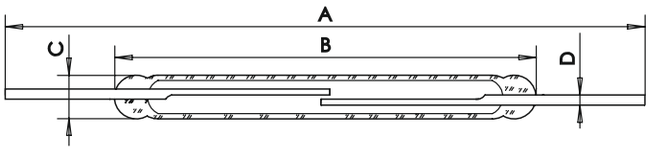


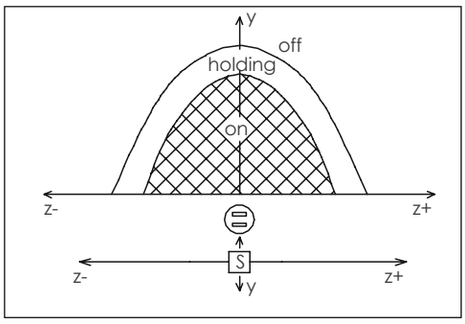


The materials used for Reed Switch magnets are generally ALNICO (an aluminium nickel cobalt alloy), a ceramic (barium ferrite or another metal oxide) or rare earth magnets. Due to their specific magnetic characteristics, the types of magnets differ in shape: ALNICO magnets are bar magnets with a length/diameter ratio of 3/1 to 5/1; oxide magnets are generally disc or moulded magnets. Also important to note is the difference in temperature coefficient: ALNICO: 0.02 %/K, oxide: 0.2 %/K

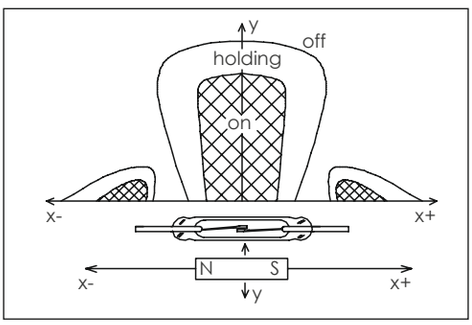


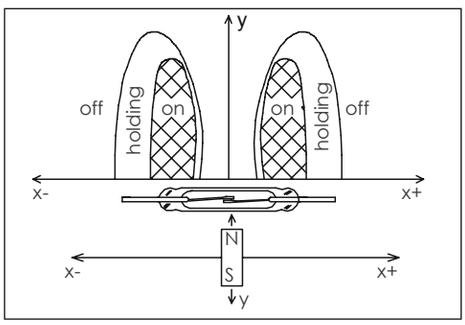

UL / CSA / ETL listed

| | | | NORMALLY OPEN | | | | | | |
|---|---|---|---|---|---|---|---|---|---|
| | | | MINIATURE | | | | | COMPACT | |
| | | S.T.G. Type | 3723 | 3715 | 3717 | 9210 | 0229 | 3823 | 3817 |
| **Parameters** | | OKI Type | | | | ORD2210V | ORD229 | | |
| Contact form | | | A | A | A | A | A | A | A |
| Contact material | | | Rh | Rh | Rh | Rh | Rh | Rh | Rh |
| Switching capacity | max. | W/VA | 40 | 40 | 40 | 100 | 50 | 60 | 60 |
| Switching voltage | max. | V AC/DC | 230 | 230 | 400 | 300/350 | 300 | 230 | 400 |
| Switching current | max. | A | 2,0 | 2,0 | 2,0 | 1,0 | 0,5 | 3,0 | 3,0 |
| Carrying current | max. | A | 3,0 | 3,0 | 3,0 | 2,5 | 2,5 | 4,0 | 4,0 |
| Dielectric strength | min. | VDC | 400 | 500 | 1000 | 1000 | 500 | 400 | 850 |
| Contact resistance | max. | mΩ | 80 | 100 | 80 | 100 | 100 | 80 | 80 |
| Insulation resistance | min. | Ω | $10^{11}$ | $10^{11}$ | $10^{11}$ | $10^{10}$ | $10^{10}$ | $10^{11}$ | $10^{11}$ |
| Pull-in sensitivity | | AW | 30…70 | 30…70 | 30…70 | 20…60 | 20…60 | 30…70 | 30…70 |
| Drop-out sensitivity | min. | AW | 15 | 15 | 15 | 7 | 6 | 15 | 15 |
| Switching time without bounce | max. | ms | 2,0 | 2,0 | 2,0 | 0,6 | 0,6 | 2,5 | 2,5 |
| Bounce time | max. | ms | 0,5 | 0,5 | 0,5 | 0,5 | 0,5 | 0,5 | 0,5 |
| Release time | max. | ms | 0,10 | 0,10 | 0,10 | 0,05 | 0,05 | 0,10 | 0,10 |
| Resonant frequency | typ. | Hz | 4200 | 4200 | 4200 | 2500 | 2500 | 2400 | 2400 |
| Operating frequency | max. | Hz | 300 | 300 | 300 | 500 | 500 | 200 | 200 |
| Vibration | 20 g | Hz | 35g/2000 | 35g/2000 | 35g/2000 | 10-1000 | 10-1000 | 35g/1000 | 35g/1000 |
| Shock | 11 ms | g | 50 | 50 | 50 | 30 | 30 | 50 | 50 |
| Capacitance | typ. | pF | 0,5 | 0,5 | 0,5 | 0,5 | 0,5 | 0,5 | 0,5 |
| Operating temperature range | | ˚C | -40...+150 | | | -40...+125 | | -40...+150 | |
| Test coil | | Type | 1700 | 1700 | 1700 | 0221 | 0221 | 1800 | 1800 |
| **Features** | | | High power, close differential | High power | High power | Vacuum, high power | High breakdown voltage | High power, close differential | High power |

**Dimensions**

| | | | | | | | | | |
|---|---|---|---|---|---|---|---|---|---|
| Total length | A max. | mm | 55,0 | 55,0 | 55,0 | 56,0 | 56,0 | 55,0 | 55,0 |
| Glass length | B max. | mm | 19,0 | 19,0 | 19,0 | 21,0 | 21,0 | 24,5 | 24,5 |
| Glass diameter | C max. | mm | 2,6 | 2,6 | 2,6 | 2,75 | 2,75 | 3,8 | 3,8 |
| Wire diameter | D max. | mm | 0,70 | 0,70 | 0,70 | 0,60 | 0,60 | 0,80 | 0,80 |

**Additional types on request**

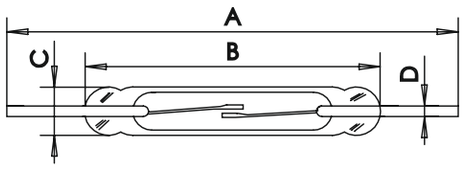


**Form A**

**Life Expectancy:**
The life expectancy of a Reed Switch is about $10^5$...$10^6$ switching cycles with maximum power. With a low load the life expectancy can reach $5x10^8$ operations. The mechanical life expectancy can reach at least $10^9$ operations. Through the switching of inductive, capacitive and lamp loads, the life expectancy is considerably reduced due to exceeding the specified maximum current.

**In General:**
For all Reed Switches the standard pull-in sensitivity is given in the table. Other pull-in sensitivities are available on request.

**Normally Closed and Bistable Reed Switches:**
All Reed Switches are available in a normally closed or bistable version.

**Pull-In Sensitivity Tolerance:**
The given pull-in sensitivity of the Reed Switch has a test equipment tolerance of ± 2 AT.

ETL listed

| | | | NORMALLY OPEN | | | | | | | |
|---|---|---|---|---|---|---|---|---|---|---|
| | | | STANDARD | | | | | | | |
| **Parameters** | | **Type** | **1517** | **1515** | **1513** | **1525** | **1520** | **1523** | **1565** | **1595** |
| Contact form | | | A | A | A | A | A | A | B | Bistable |
| Contact material | | | Rh | Rh | Rh | Rh | Rh | Rh | Rh | Rh |
| Switching capacity | max. | W/VA | 30 | 40 | 120 | 80 | 60/80 | 120 | 80 | 80 |
| Switching voltage | max. | V AC/DC | 1000 | 800 | 1000 | 250 | 250 | 250 | 250 | 250 |
| Switching current | max. | A | 1,0 | 1,0 | 3,0 | 1,3 | 1,3 | 3,0 | 1,3 | 1,3 |
| Carrying current | max. | A | 2,0 | 3,0 | 5,0 | 2,0 | 2,0 | 5,0 | 2,0 | 2,0 |
| Dielectric strength | min. | VDC | 3000 | 1500 | 3000 | 800 | 800 | 800 | 800 | 800 |
| Contact resistance | max. | mΩ | 80 | 80 | 80 | 80 | 80 | 80 | 80 | 80 |
| Insulation resistance | min. | Ω | $10^{11}$ | $10^{11}$ | $10^{11}$ | $10^{11}$ | $10^{11}$ | $10^{11}$ | $10^{11}$ | $10^{11}$ |
| Pull-in sensitivity | | AW | 75…130 | 75…130 | 75…130 | 75…130 | 75…130 | 75…130 | | |
| Drop-out sensitivity | min. | AW | 25 | 25 | 30 | 25 | 25 | 30 | | |
| Switching time without bounce | max. | ms | 3,5 | 1,5 | 3,5 | 3,5 | 3,5 | 3,5 | 3,5 | 3,5 |
| Bounce time | max. | ms | 0,5 | 0,5 | 0,5 | 0,5 | 0,5 | 0,5 | 0,5 | 0,5 |
| Release time | max. | ms | 0,20 | 0,20 | 0,20 | 0,20 | 0,20 | 0,20 | 0,20 | 0,20 |
| Resonant frequency | typ. | Hz | 900 | 900 | 900 | 900 | 900 | 900 | 900 | 900 |
| Operating frequency | max. | Hz | 100 | 100 | 100 | 100 | 100 | 100 | 100 | 100 |
| Vibration | 35 g | Hz | 500 | 500 | 500 | 500 | 500 | 500 | 500 | 500 |
| Shock | 11 ms | g | 50 | 50 | 50 | 50 | 50 | 50 | 50 | 50 |
| Capacitance | typ. | pF | 0,8 | 0,8 | 0,8 | 0,8 | 0,8 | 0,8 | 0,8 | 0,8 |
| Operating temperature range | | °C | -40...+150 | | | | | | | |
| Test coil | | Type | 1500 | 1500 | 1500 | 1500 | 1500 | 1500 | | |
| **Features** | | | High break down | High power | High power, lamp load | General purpose | Lamp load | High power, general purpose | Normally closed | Bistable |

**Dimensions**

| | | | | | | | | | | |
|---|---|---|---|---|---|---|---|---|---|---|
| Total length | A max. | mm | 79 | 79 | 79 | 79 | 79 | 79 | 79 | 79 |
| Glass length | B max. | mm | 52,0 | 52,0 | 52,0 | 52,0 | 52,0 | 52,0 | 52,0 | 52,0 |
| Glass diameter | C max. | mm | 5,4 | 5,4 | 5,4 | 5,4 | 5,4 | 5,4 | 5,4 | 5,4 |
| Wire diameter | D max. | mm | 2,5 x 0,5 | 2,5 x 0,5 | 2,5 x 0,5 | 2,5 x 0,5 | 2,5x0,5 | 2,5x0,5 | 2,5 x 0,5 | 2,5 x 0,5 |

**Additional types on request**

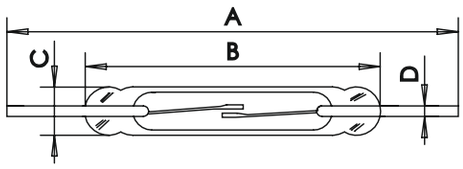


**Form A**

| Test coil type | Length in mm | Outer-ø in mm | Inner-ø in mm | Cu-wire-ø in mm | Number of turns | Nom. resistance Ω |
|---|---|---|---|---|---|---|
| 0551 | 26 | 16 | 3,5 | 0,08 | 5.000 | 550 |
| 0211 | 10 | 11 | 2,3 | 0,063 | 5.000 | 600 |
| 0221 | 15 | 11 | 2,9 | 0,071 | 5.000 | 450 |
| 1035 | 13 | 14 | 2,6 | 0,063 | 10.000 | 1.650 |
| 1500 | 48,2 | 14,2 | 5,7 | 0,09 | 10.000 | 1.000 |
| 1700 | 20,5 | 14 | 2,65 | 0,08 | 10.000 | 1.000 |
| 1800 | 23 | 15 | 3,8 | 0,08 | 10.000 | 1.000 |
| 6500 | 28 | 16 | 5,8 | 0,07 | 10.000 | 1.490 |

UL and CSA listed

| | | | CHANGE OVER | | | | | |
|---|---|---|---|---|---|---|---|---|
| | | | SUBMINIATURE | | | | | |
| | | S.T.G. Type | 0551 | 0651 | 3325 | 3425 | 3336 | 3436 |
| **Parameters** | | OKI Type | ORT551 | ORT551-1 | | | | |
| Contact form | | | C | C | C | C | C | C |
| Contact material | | | Rh | Rh | Rh | Rh | Rh | Rh |
| Switching capacity | max. | W/VA | 3 | 3 | 5 | 5 | 20 | 20 |
| Switching voltage | max. | V AC/DC | 30 | 30 | 100 | 100 | 150 | 150 |
| Switching current | max. | A | 0,2 | 0,2 | 0,5 | 0,5 | 1,0 | 1,0 |
| Carrying current | max. | A | 0,5 | 0,5 | 1,0 | 1,0 | 2,0 | 2,0 |
| Dielectric strength | min. | VDC | 150 | 150 | 200 | 200 | 200 | 200 |
| Contact resistance | max. | mΩ | 100 | 100 | 150 | 150 | 150 | 150 |
| Insulation resistance | min. | Ω | $10^9$ | $10^9$ | $10^9$ | $10^9$ | $10^9$ | $10^9$ |
| Pull-in sensitivity | | AW | 10…30 | 10…30* | 15…40 | 15…40* | 15…40 | 15…40* |
| Drop-out sensitivity | min. | AW | 4 | 4 | 8 | 8 | 5 | 5 |
| Switching time without bounce | max. | ms | 1,0 | 1,0 | 2,0 | 2,0 | 2,0 | 2,0 |
| Bounce time | max. | ms | 1,5 | 1,5 | 0,6 | 0,6 | 0,6 | 0,6 |
| Release time | max. | ms | 0,5 | 0,5 | 0,02 | 0,02 | 0,02 | 0,02 |
| Resonant frequency | typ. | Hz | 6000 | 6000 | - | - | - | - |
| Operating frequency | max. | Hz | 200 | 200 | 250 | 250 | 250 | 250 |
| Vibration | 35 g | Hz | 20g/1000 | 20g/1000 | 2000 | 2000 | 1000 | 1000 |
| Shock | 11 ms | g | 30 | 30 | 50 | 50 | 50 | 50 |
| Capacitance | typ. | pF | 1,5 | 1,5 | 0,8 | 0,8 | 0,8 | 0,8 |
| Operating temperature range | | °C | -40...+125 | -40...+125 | -40...+150 | | | |
| Test coil | | Type | 0551 | | 1035 | | 1035 | |
| **Features** | | | Miniature general purpose | 0551 with cropped N.C. contact | Miniature general purpose | 3325 with cropped N.C. contact | Miniature high power | 3336 with cropped N.C. contact |

**Dimensions**

| | | | | | | | | |
|---|---|---|---|---|---|---|---|---|
| Total length | A max. | mm | 56,5 | 56,5 | 55 | 55 | 55 | 55 |
| Glass length | B max. | mm | 14,0 | 14,0 | 14,0 | 14,0 | 14,0 | 14,0 |
| Glass diameter | C max. | mm | 2,54 | 2,54 | 2,3 | 2,3 | 2,3 | 2,3 |
| Wire diameter | D max. | mm | 3,0 | 3,0 | 0,35 x 0,75 | 0,35 x 0,75 | 0,35 x 0,75 | 0,35 x 0,75 |

**Additional types on request**

* pre-forming

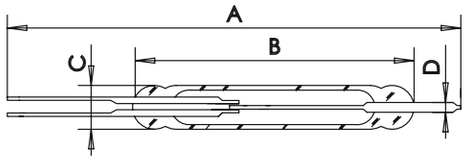


**Form C**

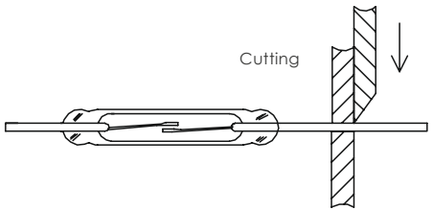


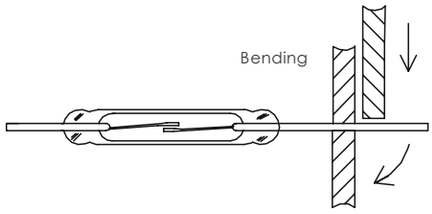


## Cutting and Bending

As the Reed Switch blades are part of the magnetic circuit of a Reed Switch, shortening the leads results in increased pull-in and drop-out values.

When cutting or bending Reed Switches, it is important that the glass body not be damaged. Therefore, the cutting or bending point should be no closer than 3 mm to the glass body.

ETL listed

| | | | CHANGE OVER | | | | | | | | |
|---|---|---|---|---|---|---|---|---|---|---|---|
| | | | COMPACT | | | | STANDARD | | | | |
| **Parameters** | | **Type** | **1925** | **1915** | **1917** | **1965** | **1995** | **1620** | **1625** | **1665** | **1695** |
| Contact form | | | C | C | C | B | Bistable | C | C | B | Bistable |
| Contact material | | | Rh | Rh | Rh | Rh | Rh | Rh | Rh | Rh | Rh |
| Switching capacity | max. | W/VA | 60 | 60 | 60 | 60 | 60 | 60 | 60 | 60 | 60 |
| Switching voltage | max. | V AC/DC | 140 | 250 | 400 | 140 | 140 | 230 | 230 | 230 | 230 |
| Switching current | max. | A | 1,0 | 1,0 | 1,0 | 1,0 | 1,0 | 1,0 | 1,0 | 1,0 | 1,0 |
| Carrying current | max. | A | 2,0 | 2,0 | 2,0 | 2,0 | 2,0 | 2,0 | 2,0 | 2,0 | 2,0 |
| Dielectric strength | min. | VDC | 250 | 500 | 1000 | 250 | 250 | 400 | 400 | 400 | 400 |
| Contact resistance | max. | mΩ | 100 | 100 | 100 | 100 | 100 | 100 | 100 | 100 | 100 |
| Insulation resistance | min. | Ω | $10^9$ | $10^9$ | $10^9$ | $10^9$ | $10^9$ | $10^9$ | $10^9$ | $10^9$ | $10^9$ |
| Pull-in sensitivity | | AW | 50…100 | 50…100 | 50…100 | | | 80…120 | 80…120 | | |
| Drop-out sensitivity | min. | AW | 20 | 20 | 20 | | | 20 | 20 | | |
| Switching time without bounce | max. | ms | 4,0 | 4,0 | 4,0 | 4,0 | 4,0 | 4,0 | 4,0 | 4,0 | 4,0 |
| Bounce time | max. | ms | 0,5 | 0,5 | 0,5 | 0,5 | 0,5 | 0,5 | 0,5 | 0,5 | 0,5 |
| Release time | max. | ms | 0,15 | 0,15 | 0,15 | 0,15 | 0,15 | 0,10 | 0,10 | 0,10 | 0,10 |
| Resonant frequency | typ. | Hz | - | - | - | - | - | - | - | - | - |
| Operating frequency | max. | Hz | 100 | 100 | 100 | 100 | 100 | 100 | 100 | 100 | 100 |
| Vibration | 35 g | Hz | 2000 | 2000 | 2000 | 2000 | 2000 | 500 | 500 | 500 | 500 |
| Shock | 11 ms | g | 50 | 50 | 50 | 50 | 50 | 50 | 50 | 50 | 50 |
| Capacitance | typ. | pF | 1,0 | 1,0 | 1,0 | 1,0 | 1,0 | 1,0 | 1,0 | 1,0 | 1,0 |
| Operating temperature range | | °C | -40...+150 | | | | | | | | |
| Test coil | | Type | 1500 | 1500 | 1500 | | | 1500 | 1500 | | |
| **Features** | | | General purpose | High power | High power | Normally closed | Bistable | Long life | General purpose | Normally closed | Bistable |

**Dimensions**

| | | | | | | | | | | | |
|---|---|---|---|---|---|---|---|---|---|---|---|
| Total length | A max. | mm | 70 | 70 | 70 | 70 | 70 | 81 | 81 | 81 | 81 |
| Glass length | B max. | mm | 36,0 | 36,0 | 36,0 | 36,0 | 36,0 | 52,0 | 52,0 | 52,0 | 52,0 |
| Glass diameter | C max. | mm | 5,6 | 5,6 | 5,6 | 5,6 | 5,6 | 5,6 | 5,6 | 5,6 | 5,6 |
| Wire diameter | D max. | mm | 2,5 x 0,5 | 2,5 x 0,5 | 2,5 x 0,5 | 2,5 x 0,5 | 2,5 x 0,5 | 2,5 x 0,5 | 2,5 x 0,5 | 2,5 x 0,5 | 2,5 x 0,5 |

**Additional types on request**

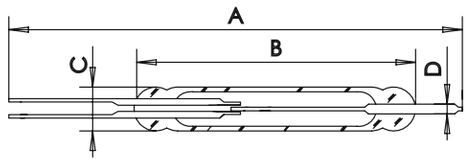


**Form C**

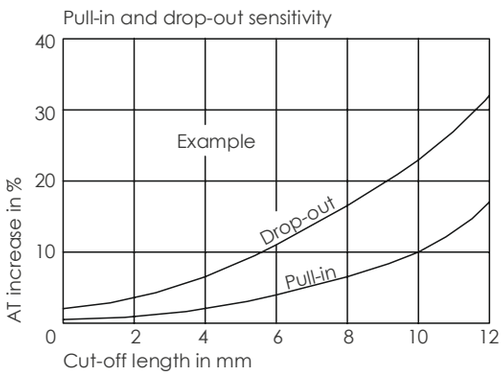


Approvals:
Under ETL No. 3105897(conforms to UL Std. 508 / certified to CAN/CSA Std. C22.2 No. 14) listed reed switches:
1513, 1515, 1517, 1520, 1523, 1525, 1565, 1595, 1620, 1623, 1625, 1665, 1695, 1915, 1917, 1925, 1965. 1995, 2312, 2314, 2315, 2317, 2322, 2325, 2522, 2525, 2715, 2717, 2722, 2725, 3325, 3336, 3425, 3436, 3715, 3717, 3723, 3817, 3823.

Under UL-No.: E70063 and CSA-No.: LR86615 approved Reed Switches:

0211, 0213, 0221, 0228, 0219, 2211, 2212, 0229, 9210, 0234, 0233, 0551, 0324, 2221.

# Introduction

**GÜNTHER®** High Voltage Reed Relay technology is based upon our extensive experience in the design and manufacture of Reed Switches and Reed Relays.

**GÜNTHER®** High Voltage Reed Relays have outstanding performance characteristics in insulation resistance and stand-off voltage. The high dielectric stand-off voltage between the open contacts as well as the high switching voltage are achieved by using high vacuum Reed Switches. A proven assembly and potting technique assures the following relay characteristics:

- Stand-off voltage across open contacts from **3 KV** up to **14 KV** max.
- Stand-off voltage between coil and contact from **10 KV** up to **25 KV** max.
- Switching voltage from **1.5 KV** up to **10 KV** max.

**GÜNTHER®** High Voltage Reed Relays are offered in a variety of contact configurations:

- **1 N.O., 2 N.O.** or **4 N.O.** contacts (normally open contacts)
- **1 N.C.** (normally closed contact)
- **1 N.C. / 1 N.O.** (1 normally closed contact/ 1 normally open contact)

**GÜNTHER®** High Voltage Reed Relays offer mounting flexibility enabling the customer to match different application requirements:

- Coil and Reed Switch connecting pins in the base plate for PCB mounting.
- Coil connecting pins in the base plate for PCB mounting and Reed Switch connections with cable.
- Coil connecting pins in the base plate for PCB mounting and Reed Switch connecting pins on top of the relay.

**GÜNTHER®** High Voltage Reed Relays have additional features:

- Immunity against harsh environmental conditions (eg. high humidity) by using hermetically sealed switching contacts potted in a strong plastic case.
- High shock and vibration resistance.
- Low contact capacitance and high switching frequency in comparison with electro-mechanical, open relay contacts.
- Washable and resistant to standard automatic cleaning methods.

**GÜNTHER®** High Voltage Reed Relays find application in many areas of the electrotechnical and electronic industry:

- Electronic medical equipment
- Cable tester arrays and cable test equipment
- Copy machines
- Laser optical systems and infra-red equipment
- Test equipment

## Standard Types - Selection Chart

| | | |
|---|---|---|
| **1270** | Number of contacts: | 1 contact |
| | **Contact form:** | 1 normally open |
| | **Coil and Reed Switch terminals:** | Soldering pins on bottom |
| **4270** | See type 1270 | |
| | **Contact form:** | 1 normally closed |

| | | |
|---|---|---|
| **1280** | Number of contacts: | 1 contact |
| | **Contact form:** | 1 normally open |
| | **Coil terminals:** | Soldering pins on bottom |
| | **Reed Switch terminals:** | Soldering pins on top |
| **4280** | See type 1280 | |
| | **Contact form:** | 1 normally closed |

| | | |
|---|---|---|
| **1290** | Number of contacts: | 1 contact |
| | **Contact form:** | 1 normally open |
| | **Coil terminals:** | Soldering pins on bottom |
| | **Reed Switch terminals:** | High voltage cable on top |
| **4290** | See type 1290 | |
| | **Contact form:** | 1 normally closed |

| | | |
|---|---|---|
| **1272** | Number of contacts: | 2 contacts |
| | **Contact form:** | 2 normally open |
| | **Coil terminals:** | Soldering pins on bottom |
| | **Reed Switch terminals:** | Switch 1: soldering pins on bottom<br>Switch 2: soldering pins on top |


| | | |
|---|---|---|
| **1274** | Number of contacts: | 4 contacts |
| | **Contact form:** | 4 normally open |
| | **Coil and Reed Switch terminals:** | Soldering pins on bottom |


| | | |
|---|---|---|
| **1294** | See type 1274 | |
| | **Reed Switch terminals:** | High voltage cable at sides |


| | | |
|---|---|---|
| **5272** | Number of contacts: | 2 contacts |
| | **Contact form:** | 1 normally open / 1 normally closed |
| | **Coil and Reed Switch terminals:** | Soldering pins on bottom |


| | | |
|---|---|---|
| **5292** | See type 5272 | |
| | **Reed Switch terminals:** | High voltage cable at sides |

# HIGH VOLTAGE REED RELAYS

| CONTACT FORM | | | 1 NORMALLY OPEN | | | | | | | | | | | |
|---|---|---|---|---|---|---|---|---|---|---|---|---|---|---|
| Type | | | 3316 | 3390 | 3391 | 3392 | 3316 | 3390 | 3391 | 3392 | 3316 | 3390 | 3391 | 3392 |
| | | | 1270 | 1270 | 1270 | 1270 | 1280 | 1280 | 1280 | 1280 | 1290 | 1290 | 1290 | 1290 |
| Data | | | . . 6 | . . 6 | . . 6 | . . 6 | . . 6 | . . 6 | . . 6 | . . 6 | . . 6 | . . 6 | . . 6 | . . 6 |
| **Contact Parameters** | | | | | | | | | | | | | | |
| Switching voltage | max. | $VAC_{peak}$ | 1.500 | 5.000 | 7.500 | 10.000 | 1.500 | 5.000 | 7.500 | 10.000 | 1.500 | 5.000 | 7.500 | 10.000 |
| Dielectric strength | min. | VDC | 3.000 | 7.000 | 10.000 | 14.000 | 3.000 | 7.000 | 10.000 | 14.000 | 3.000 | 7.000 | 10.000 | 14.000 |
| Switching capacity | max. | W | 30 | 50 | 50 | 50 | 30 | 50 | 50 | 50 | 30 | 50 | 50 | 50 |
| Switching current | max. | A | 1 | 3 | 3 | 3 | 1 | 3 | 3 | 3 | 1 | 3 | 3 | 3 |
| Carrying current | max. | A | 2 | 5 | 5 | 5 | 2 | 5 | 5 | 5 | 2 | 5 | 5 | 5 |
| Contact resistance | max. | mΩ | 80 | 250 | 250 | 250 | 80 | 250 | 250 | 250 | 80 | 250 | 250 | 250 |
| **Coil Parameters** | | | | | | | | | | | | | | |
| Nominal coil voltage | | VDC | 5 | 12 | 24 | | 5 | 12 | 24 | | 5 | 12 | 24 | |
| Pull-in voltage | max. | VDC | 4 | 10 | 20 | | 4 | 10 | 20 | | 4 | 10 | 20 | |
| Drop-out voltage | min. | VDC | 1 | 2 | 4 | | 1 | 2 | 4 | | 1 | 2 | 4 | |
| Operating voltage | max. | VDC | 8 | 18 | 36 | | 8 | 18 | 36 | | 8 | 18 | 36 | |
| Coil resistance | +/-15 % | Ω | 35 | 200 | 720 | | 35 | 200 | 720 | | 35 | 200 | 720 | |

**Relay Parameters**

| | | | | | |
|---|---|---|---|---|---|
| Dielectric strength | coil/contact | VDC | 20.000 | 20.000 | 20.000 |
| Dielectric strength | contact/contact | VDC | - | - | - |
| Insulation resistance | coil/contact | Ω | $1 \times 10^9$ | $1 \times 10^9$ | $1 \times 10^9$ |
| Storage temperature | | °C | -35...+90 | -35...+90 | -35...+90 |
| Operating temperature | | °C | -20...+70 | -20...+70 | -20...+70 |
| Pull-in time incl. bounce | | ms | 3,5 | 3,5 | 3,5 |
| Drop-out time | | ms | 1,5 | 1,5 | 1,5 |
| Dimensions | | page | 18 | 18 | 18 |
| Weight | approx. | g | 55 | 55 | 65 |
| Pin configuration | | | 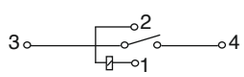 | 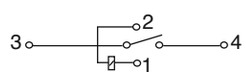 | 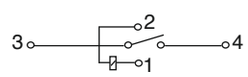 |

Switches with contact code 90-92 are tungsten-plated and should be used only for switching power above approx. 10 mW.

### General Parameters
All characteristics for pull-in voltage, drop-out voltage and coil resistance at 20°C +/-3°C ambient temperature. For other temperatures see diagram "temperature range".

### Contact Resistance
Initial value at nominal voltage measured by the Kelvin test method at 20V/100mA.

### Soldering
During soldering make sure no mechanical stress is applied to terminals because the thermoplastic moulding material might be damaged.

**Order Example:**

33 92 1270 05 6

Product group
Contact code
Standard type
Version
Nominal coil voltage
05 = 5V
12 = 12V
24 = 24V

### Insulation Resistance
The insulation resistance is measured with a Tera Ohmmeter at 500V DC. The ambient climate is 20°C +/-3°C and 50 % relative humidity.

### Switching Voltage, Switching Current and Power Rating
The listed values for switching voltage, switching current and power rating are absolute limits. If any of these values is exceeded, a reduction of life expectancy will result (see following power diagram).

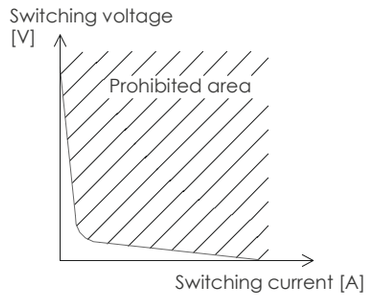

| CONTACT FORM | 2 NORMALLY OPEN | | | | 4 NORMALLY OPEN | | | | | | | |
|---|---|---|---|---|---|---|---|---|---|---|---|---|
| **Type** | **3316** | **3390** | **3391** | **3392** | **3316** | **3390** | **3391** | **3392** | **3316** | **3390** | **3391** | **3392** |
| | **1272** | **1272** | **1272** | **1272** | **1274** | **1274** | **1274** | **1274** | **1294** | **1294** | **1294** | **1294** |
| **Data** | **. . 6** | **. . 6** | **. . 6** | **. . 6** | **. . 6** | **. . 6** | **. . 6** | **. . 6** | **. . 6** | **. . 6** | **. . 6** | **. . 6** |

**Contact Parameters**

| | | | | | | | | | | | | | |
|---|---|---|---|---|---|---|---|---|---|---|---|---|---|
| Switching voltage | max. | $VAC_{peak}$ | 1.500 | 5.000 | 7.500 | 10.000 | 1.500 | 5.000 | 7.500 | 10.000 | 1.500 | 5.000 | 7.500 | 10.000 |
| Dielectric strength | min. | VDC | 3.000 | 7.000 | 10.000 | 14.000 | 3.000 | 7.000 | 10.000 | 14.000 | 3.000 | 7.000 | 10.000 | 14.000 |
| Switching capacity | max. | W | 30 | 50 | 50 | 50 | 30 | 50 | 50 | 50 | 30 | 50 | 50 | 50 |
| Switching current | max. | A | 1 | 3 | 3 | 3 | 1 | 3 | 3 | 3 | 1 | 3 | 3 | 3 |
| Carrying current | max. | A | 2 | 5 | 5 | 5 | 2 | 5 | 5 | 5 | 2 | 5 | 5 | 5 |
| Contact resistance | max. | mΩ | 80 | 250 | 250 | 250 | 80 | 250 | 250 | 250 | 80 | 250 | 250 | 250 |

**Coil Parameters**

| | | | | | | | | | | | |
|---|---|---|---|---|---|---|---|---|---|---|---|
| Nominal coil voltage | | VDC | 5 | 12 | 24 | 5 | 12 | 24 | 5 | 12 | 24 |
| Pull-in voltage | max. | VDC | 4 | 10 | 20 | 4 | 10 | 20 | 4 | 10 | 20 |
| Drop-out voltage | min. | VDC | 0,5 | 1,2 | 2,4 | 0,5 | 1 | 1 | 0,5 | 1 | 2 |
| Operating voltage | max. | VDC | 7 | 16 | 29 | 7,5 | 14,5 | 27 | 7,5 | 14,5 | 27 |
| Coil resistance | +/-15 % | Ω | 15 | 85 | 275 | 12 | 42 | 175 | 12 | 42 | 175 |

**Relay Parameters**

| | | | | | |
|---|---|---|---|---|---|
| Dielectric strength | coil/contact | VDC | 10.000 | 10.000 | 10.000 |
| Dielectric strength | contact/contact | VDC | 10.000 | 8.000 | 8.000 |
| Insulation resistance | coil/contact | Ω | $1 \times 10^9$ | $1 \times 10^9$ | $1 \times 10^9$ |
| Storage temperature | | °C | -35...+90 | -35...+90 | -35...+90 |
| Operating temperature | | °C | -20... +70 | -20... +70 | -20... +70 |
| Pull-in time incl. bounce | | ms | 3,5 | 3,5 | 3,5 |
| Drop-out time | | ms | 1,5 | 1,5 | 1,5 |
| Dimensions | | page | 18 | 18 | 18 |
| Weight | approx. | g | 55 | 130 | 140 |
| Pin configuration | | | 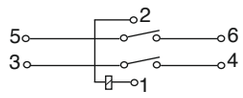 | 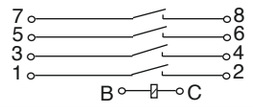 | 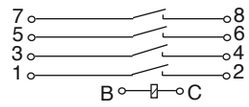 |

Switches with contact code 90-92 are tungsten-plated and should be used only for switching power above approx. 10 mW.

### Dielectric Strength

Tested in a radiation (e.g. light, x-ray) free environment by applying a DC voltage across the open contacts, between adjacent contacts and between coil and contact. The trigger current is 100 µA. The unused contacts should not be connected during the test.

### Switching Time

Pull-in time including bounce time at nominal voltage and 20 Hz: 1,5 … 3,5 ms

Release time (without diode) at nominal voltage and 20 Hz: 0,4 … 1,5 ms

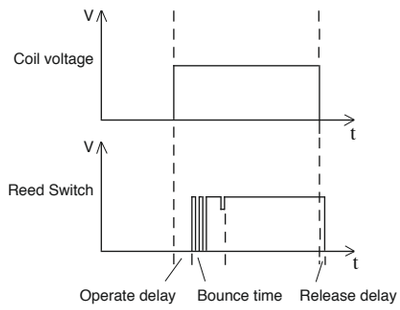


### Contact Capacitance (Typical Values)

Die Kapazitätswerte gelten als typische Werte.

| Capacitance: | N.O. |
|---|---|
| Across open contacts | 0,8 - 1,2 pF |
| Between open contacts and coil | 1,4 - 2,2 pF |
| Between closed contacts and coil | 2,3 - 3,5 pF |

# HIGH VOLTAGE REED RELAYS

| CONTACT FORM | | | 1 NORMALLY CLOSED + 1 NORMALLY OPEN | | | | | | | |
|---|---|---|---|---|---|---|---|---|---|---|
| **Type** | | | **3316** | **3390** | **3391** | **3392** | **3316** | **3390** | **3391** | **3392** |
| | | | **5272** | **5272** | **5272** | **5272** | **5292** | **5292** | **5292** | **5292** |
| **Data** | | | **. . 6** | **. . 6** | **. . 6** | **. . 6** | **. . 6** | **. . 6** | **. . 6** | **. . 6** |
| **Contact Parameters** | | | | | | | | | | |
| Switching voltage | max. | $VAC_{peak}$ | 1.500 | 5.000 | 7.500 | 10.000 | 1.500 | 5.000 | 7.500 | 10.000 |
| Dielectric strength | min. | VDC | 3.000 | 7.000 | 10.000 | 14.000 | 3.000 | 7.000 | 10.000 | 14.000 |
| Switching capacity | max. | W | 30 | 50 | 50 | 50 | 30 | 50 | 50 | 50 |
| Switching current | max. | A | 1 | 3 | 3 | 3 | 1 | 3 | 3 | 3 |
| Carrying current | max. | A | 2 | 5 | 5 | 5 | 2 | 5 | 5 | 5 |
| Contact resistance | max. | mΩ | 80 | 250 | 250 | 250 | 80 | 250 | 250 | 250 |

| **Coil Parameters** | | | | | | | | |
|---|---|---|---|---|---|---|---|---|
| Nominal coil voltage | | VDC | 5 | 12 | 24 | 5 | 12 | 24 |
| Pull-in voltage | max. | VDC | 4 | 10 | 20 | 4 | 10 | 20 |
| Drop-out voltage | min. | VDC | 0,5 | 1 | 2 | 0,5 | 1 | 2 |
| Operating voltage | max. | VDC | 7,5 | 14,5 | 27 | 7,5 | 14,5 | 27 |
| Coil resistance | +/-15 % | Ω | 27 | 135 | 345 | 27 | 135 | 345 |

| **Relay Parameters** | | | | |
|---|---|---|---|---|
| Dielectric strength | coil/contact | VDC | 10.000 | 10.000 |
| Dielectric strength | contact/contact | VDC | 8.000 | 8.000 |
| Insulation resistance | coil/contact | Ω | $1 \times 10^9$ | $1 \times 10^9$ |
| Storage temperature | | ˚C | -35...+90 | -35...+90 |
| Operating temperature | | ˚C | -20... +70 | -20... +70 |
| Pull-in time incl. bounce | | ms | 3,5 | 3,5 |
| Drop-out time | | ms | 1,5 | 1,5 |
| Dimensions | | page | 18 | 18 |
| Weight | approx. | g | 130 | 140 |
| Pin configuration | | | 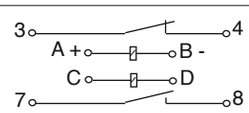  | 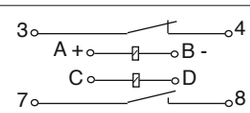  |

Switches with contact code 90-92 are tungsten-plated and should be used only for switching power above approx. 10 mW.

## Life Expectancy

The life expectancy of a Reed Relay is at least $10^5$...$10^6$ operations at nominal load. At minimum load the life expectancy can endure up to $5 \times 10^8$ operations. The mechanical life expectancy is $10^9$ operations (minimum).
Through the switching of higher loads, especially inductive or capacitive and lamp loads, life expectancy can be considerably reduced due to exceeding the permissible maximum current.

Proper contact protection will reduce electromagnetic interference and rapid contact erosion. Suppressing diodes in connection with inductive loads may cause extreme contact wear.

## Shock and Vibration

During shock and vibration tests the relays must be energized with nominal voltage. The contact should not open or close longer than 10 $\mu$s.
Vibration stability: 20 g/50 … 500 Hz
Shock stability: 35 g/11 ms half sine wave.

| CONTACT FORM | | | 1 NORMALLY CLOSED | | | | | | | | | | | |
|---|---|---|---|---|---|---|---|---|---|---|---|---|---|---|
| Type | | | 3316 | 3390 | 3391 | 3392 | 3316 | 3390 | 3391 | 3392 | 3316 | 3390 | 3391 | 3392 |
| | | | 4270 | 4270 | 4270 | 4270 | 4280 | 4280 | 4280 | 4280 | 4290 | 4290 | 4290 | 4290 |
| Data | | | . . 6 | . . 6 | . . 6 | . . 6 | . . 6 | . . 6 | . . 6 | . . 6 | . . 6 | . . 6 | . . 6 | . . 6 |
| **Contact Parameters** | | | | | | | | | | | | | | |
| Switching voltage | max. | $VAC_{peak}$ | 1.500 | 5.000 | 7.500 | 10.000 | 1.500 | 5.000 | 7.500 | 10.000 | 1.500 | 5.000 | 7.500 | 10.000 |
| Dielectric strength | min. | VDC | 3.000 | 7.000 | 10.000 | 14.000 | 3.000 | 7.000 | 10.000 | 14.000 | 3.000 | 7.000 | 10.000 | 14.000 |
| Switching capacity | max. | W | 30 | 50 | 50 | 50 | 30 | 50 | 50 | 50 | 30 | 50 | 50 | 50 |
| Switching current | max. | A | 1 | 3 | 3 | 3 | 1 | 3 | 3 | 3 | 1 | 3 | 3 | 3 |
| Carrying current | max. | A | 2 | 5 | 5 | 5 | 2 | 5 | 5 | 5 | 2 | 5 | 5 | 5 |
| Contact resistance | max. | mΩ | 80 | 250 | 250 | 250 | 80 | 250 | 250 | 250 | 80 | 250 | 250 | 250 |
| **Coil Parameters** | | | | | | | | | | | | | | |
| Nominal coil voltage | | VDC | 5 | 12 | 24 | | 5 | 12 | 24 | | 5 | 12 | 24 | |
| Pull-in voltage | max. | VDC | 4 | 10 | 20 | | 4 | 10 | 20 | | 4 | 10 | 20 | |
| Drop-out voltage | min. | VDC | 0,5 | 1 | 2 | | 0,5 | 1 | 2 | | 0,5 | 1 | 2 | |
| Operating voltage | max. | VDC | 6,5 | 14,5 | 27 | | 6,5 | 14,5 | 27 | | 6,5 | 14,5 | 27 | |
| Coil resistance | +/-15 % | Ω | 50 | 400 | 675 | | 50 | 400 | 675 | | 50 | 400 | 675 | |
| **Relay Parameters** | | | | | | | | | | | | | | |
| Dielectric strength | coil/contact | VDC | 20.000 | | | | 20.000 | | | | 20.000 | | | |
| Dielectric strength | contact/contact | VDC | - | | | | - | | | | - | | | |
| Insulation resistance | coil/contact | Ω | $1 \times 10^9$ | | | | $1 \times 10^9$ | | | | $1 \times 10^9$ | | | |
| Storage temperature | | °C | -35...+ 90 | | | | -35...+ 90 | | | | -35...+ 90 | | | |
| Operating temperature | | °C | -20...+ 70 | | | | -20...+ 70 | | | | -20...+ 70 | | | |
| Pull-in time incl. bounce | | ms | 3,5 | | | | 3,5 | | | | 3,5 | | | |
| Drop-out time | | ms | 1,5 | | | | 1,5 | | | | 1,5 | | | |
| Dimensions | | page | 18 | | | | 18 | | | | 18 | | | |
| Weight | approx. | g | 55 | | | | 55 | | | | 65 | | | |
| Pin configuration | | | 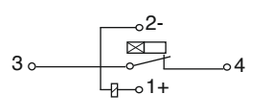 | | | | 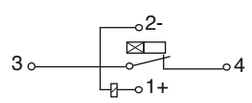 | | | | 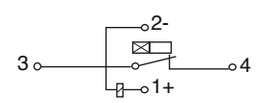 | | | |

Switches with contact code 90-92 are tungsten-plated and should be used only for switching power above approx. 10 mW.

### Operating Temperature

The operating temperature is the internal temperature of the relay (ambient temperature plus self heating). If relays are operating at higher ambient temperatures ($\vartheta_u$) than + 20 °C, the pull-in voltage and the maximum coil voltage must be calculated as follows:
Pull-in voltage = Pull-in voltage at 20 °C x k1
Maximum coil voltage = Max. coil voltage at 20 °C x k2

When mounting relays side by side a gap of approximately half the relay-width is recommended to avoid mutual magnetic influence.

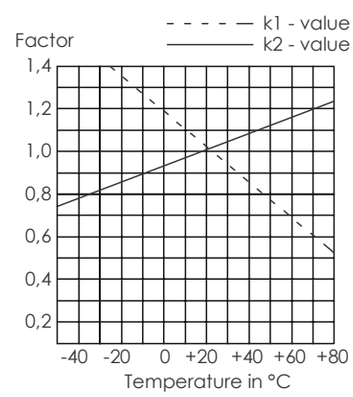

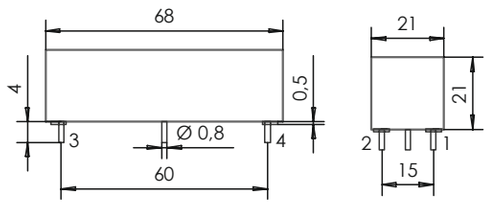


33.. 1270 .. 6 33.. 4270 .. 6

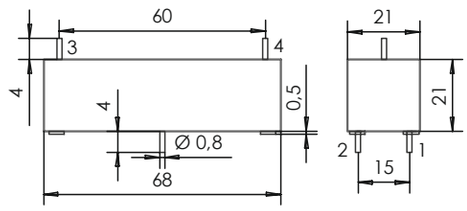


33.. 1280 .. 6 33.. 4280 .. 6

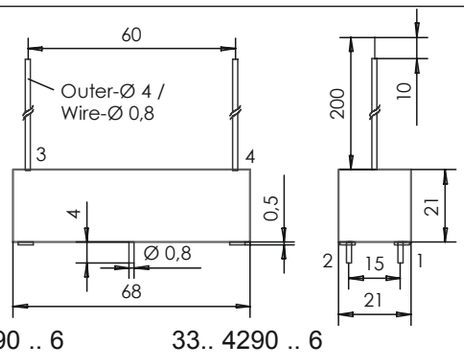


33.. 1290 .. 6 33.. 4290 .. 6

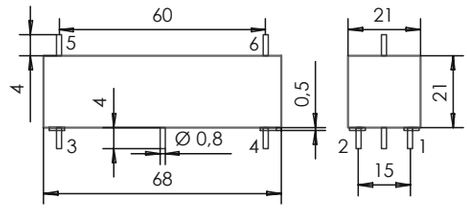


33.. 1272 .. 6

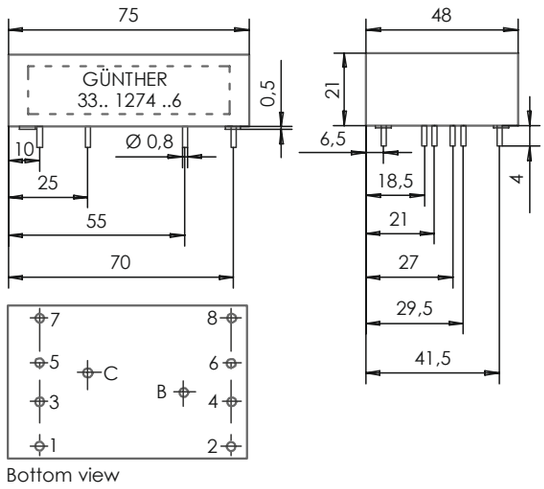


33.. 1274 .. 6

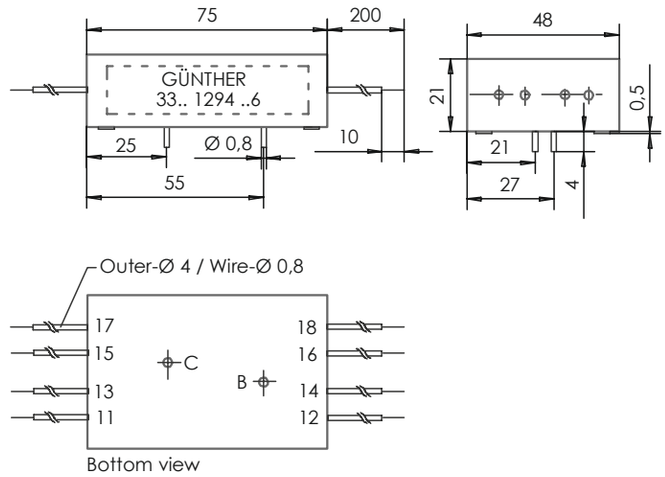


33.. 1294 .. 6

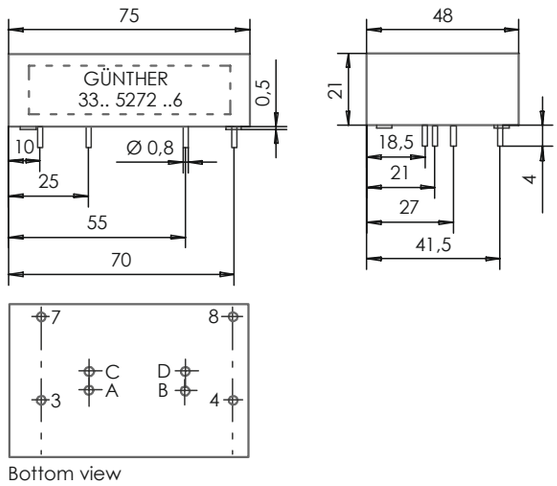


33.. 5272 .. 6

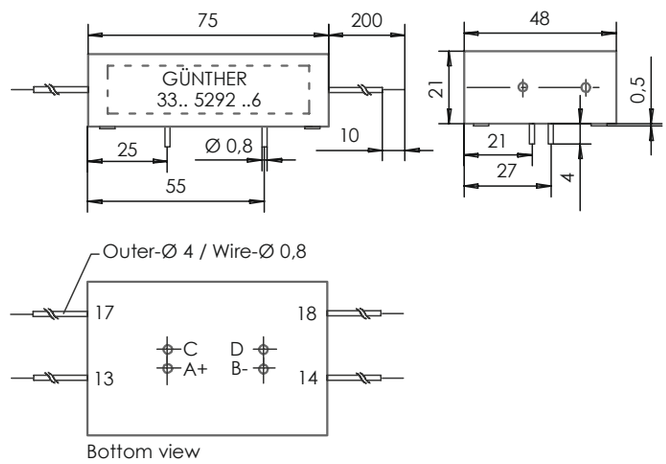


33.. 5292 .. 6

Dimensions in mm

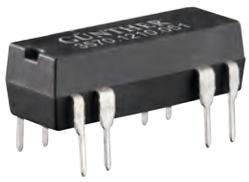

| Version | DIL-High Profile | | | |
|---|---|---|---|---|
| **Contact Form** | **1 Normally Open** | **2 Normally Open** | **1 Change Over** | **1 Change Over** |
| **Type** | **3570 1210 ...** | **3572 1220 ...** | **3563 1231 ...** | **3573 1231 ...** |
| **Features** | - Industry-standard housing | - Industry-standard housing | - Industry-standard housing | - Industry-standard housing |

**Coil Parameters**

| | | | | | | | | | | | | | | |
|---|---|---|---|---|---|---|---|---|---|---|---|---|---|---|
| Nominal coil voltage | | VDC | 5 | 12 | 24 | 5 | 12 | 24 | 5 | 12 | 24 | 5 | 12 | 24 |
| Pull-in voltage | max. | VDC | 3,8 | 9 | 18 | 3,8 | 9 | 18 | 3,8 | 9 | 18 | 3,5 | 8 | 16 |
| Drop-out voltage | min. | VDC | 0,8 | 1 | 2 | 0,8 | 1 | 2 | 1 | 2 | 4 | 1 | 2 | 4 |
| Operating voltage | max. | VDC | 20 | 30 | 40 | 10 | 20 | 40 | 10 | 18 | 35 | 10 | 18 | 35 |
| Coil resistance | ±10% | Ω | 500 | 1000 | 2150 | 140 | 500 | 2150 | 200 | 500 | 2150 | 200 | 500 | 2150 |

**Contact Parameters**

| | | | | | | |
|---|---|---|---|---|---|---|
| Switching voltage | max. | W/VA | 10 | 10 | 3 | 5 |
| Dielectric strength | max. | V | 100 AC/DC | 100 AC/DC | 70 AC / 100 DC | 100 AC/DC |
| Switching capacity | max. | A | 0,5 | 0,5 | 0,25 | 0,5 |
| Switching current | max. | A | 1,0 | 1,0 | 0,5 | 1,0 |
| Carrying current | max. | mΩ | 150 | 150 | 200 | 150 |
| Contact resistance | min. | VDC | 200 | 200 | 140 | 200 |

**Relay Parameters**

| | | | | | | |
|---|---|---|---|---|---|---|
| Dielectric strength | coil/contact | VDC | 1000 | 1000 | 1000 | 500 |
| Insulation resistance | coil/contact | Ω | $10^{10}$ | $10^{10}$ | $10^{10}$ | $10^{10}$ |
| Storage temperature | | °C | -40...+105 | -40...+105 | -40...+105 | -40...+105 |
| Operating temperature | | °C | -35...+80 | -35...+80 | -35...+80 | -35...+80 |
| Pull-in time incl. bounce | | ms | 0,5 | 0,5 | 2,0 | 1,2 |
| Drop-out time | | ms | 0,5 | 0,5 | 3,0 | 0,8 |
| Dimensions | | page | 21 | 21 | 21 | 21 |
| Weight | | approx. g | 2,3 | 2,3 | 2,3 | 2,3 |
| Pin configuration (top view) | | | 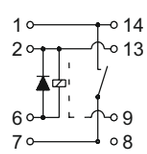 | 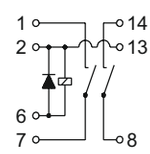 | 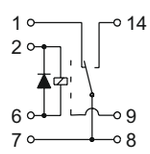 | 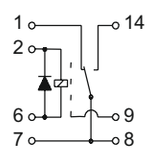 |

**General Parameters**
**Life Expectancy**
The life expectancy of a Reed Relay is at least $10^5$...$10^6$ operations at nominal load. At minimum load the life expectancy can be up to 5 x $10^8$ operations.
The mechanical life expectancy is $10^9$ operations (minimum).
Through the switching of higher loads, especially inductive or capacitive and lamp loads, life expectancy can be considerably reduced due to exceeding the permissible maximum current.

**Order Example:**

35 70 1210 05 1

Product group
Contact code
Standard type

Version
1 = without diode
3 = with diode

Nominal coil voltage
05 = 5V
12 = 12V
24 = 24V

# DIL-SIL-REED RELAYS

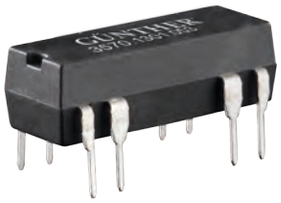



| | | | | | | | | |
|---|---|---|---|---|---|---|---|---|
| **Version** | | | **DIL-Low Profile** | | | **SIL** | | |
| **Contact Form** | | | **1 Normally Open** | | | **1 Normally Open** | | |
| **Type** | | | **3570 1301 ...** | | | **3570 1331 ...** | | |
| **Features** | | | - Industry-standard | | | - Industry-standard | | |
| **Coil Parameters** | | | | | | | | |
| Nominal coil voltage | | VDC | 5 | 12 | 24 | 5 | 12 | 24 |
| Pull-in voltage | max. | VDC | 3,8 | 9 | 18 | 3,8 | 9 | 18 |
| Drop-out voltage | min. | VDC | 0,8 | 1 | 2 | 0,8 | 1,5 | 2 |
| Operating voltage | max. | VDC | 15 | 20 | 30 | 15 | 30 | 40 |
| Coil resistance | ±10% | Ω | 500 | 1000 | 2000 | 500 | 1000 | 2000 |
| **Contact Parameters** | | | | | | | | |
| Switching capacity | max. | W/VA | 10 | | | 10 | | |
| Switching voltage | max. | V | 100 AC/DC | | | 100 AC/DC | | |
| Switching current | max. | A | 0,5 | | | 0,5 | | |
| Carrying current | max. | A | 1,0 | | | 1,0 | | |
| Contact resistance | max. | mΩ | 150 | | | 150 | | |
| Dielectric strength | min. | VDC | 200 | | | 200 | | |
| **Relay Parameters** | | | | | | | | |
| Dielectric strength | coil/contact | VDC | 1000 | | | 1000 | | |
| Insulation resistance | coil/contact | Ω | $10^{10}$ | | | $10^{10}$ | | |
| Storage temperature | | °C | -40...+105 | | | -40...+105 | | |
| Operating temperature | | °C | -35...+80 | | | -35...+80 | | |
| Pull-in time incl. bounce time max. | | ms | 0,5 | | | 0,5 | | |
| Drop-out time with diode | | ms | 0,5 | | | 0,5 | | |
| Dimensions | | page | 21 | | | 21 | | |
| Weight | | approx. g | 1,8 | | | 1,6 | | |
| Pin configuration (top view) | | | 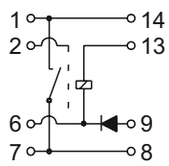  | | | 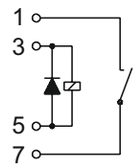  | | |

**Vibration and Shock Resistance**
During the evaluation of vibration and shock resistance, the relays are driven with nominal voltage. The switches should not open longer than 10 µsec.

| | Normally Open | Change Over |
|---|---|---|
| Vibration resist. | 20 g / 5...2000 Hz | 10 g / 5...500 Hz |
| Shock resistance | 100 g / 11 ms<br>Sine half wave | 50 g / 11 ms<br>Sine half wave |

**Washability**
Resistant to Caltron, Freon, alcohol and distilled (pure) water. During the final rinsing phase only the purest substances should be used.

**Capacitance**
The capacitance parameters are regarded as typical and are calculated for versions without shielding:

| Capacitance, measured... | N.O. | Change Over |
|---|---|---|
| across open contact | 0,8 pF | 2,5 pF |
| between open contact and coil | 1,5 pF | 2,5 pF |
| between closed contact and coil | 3,0 pF | 2,5 pF |

**Solderability**
By using laser welding in manufacture, a number of our DIL-SIL-Reed Relays are suitable for enhanced soldering requirements.

**Hole Diameter in PCB:** Ø 0,65 mm

## DIL-High Profile

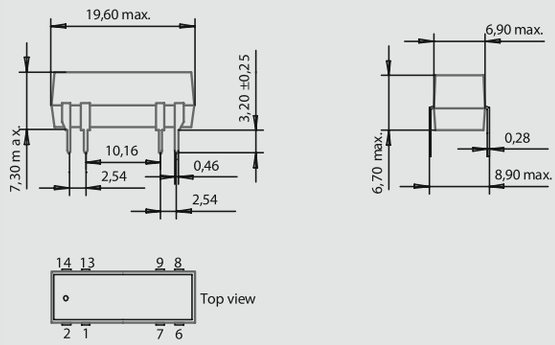


## DIL-Low Profile

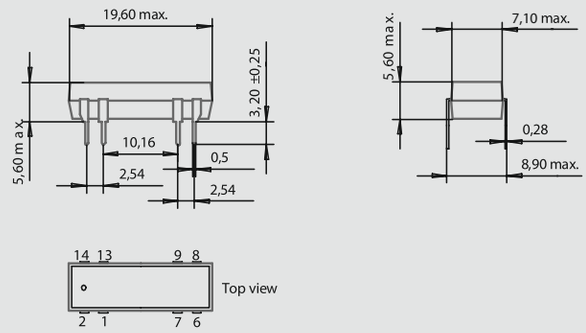


## SIL

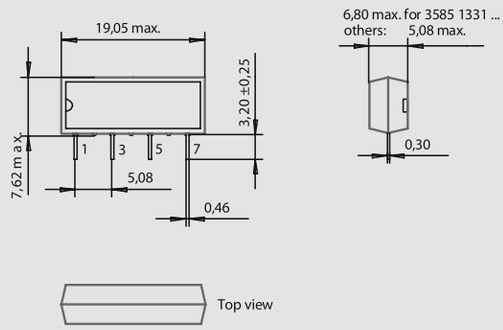


Dimensions in mm

**Pull-in and Drop-out Voltage, Coil Resistance**
The tolerances indicated are valid at 25 °C ± 3 °C. The temperature coefficient of the coil resistance is 0,4 % / °C.

**Switching Voltage, Current and Capacity**
The parameters as listed for switching voltage, current and capacity are maximum values. Exceeding any one of these values causes overload and reduces relay life expectancy.

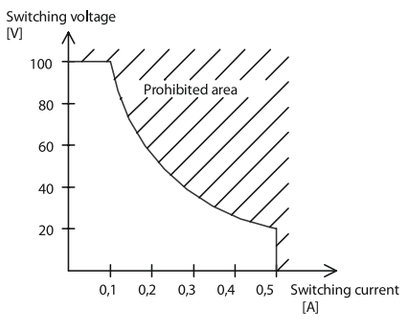


**Contact Resistance**
The contact resistance indicated is valid for new relays at nominal coil voltage.
The four-point method at 2 VDC / 100 mA or 10 mA is applied.
Custom solutions for special applications, especially for switching signals smaller than 1 mV at 10 $\mu$A (low-level-applications) or applications requiring dynamic contact resistance measurement can be produced for special switching needs.

**Temperature Range**
The operating temperature of the relay is the equivalent of the internal temperature. If the relays are used in ambient temperatures ($\vartheta_a$) higher than 20 °C, the maximum permissible operating voltage ($U_T$) must be calculated according to the table indicated below, using the formula:
$U_T = U_{max} \times k_1$
($U_{max}$ = max. permissible operating voltage)

| $\vartheta_u$ (°C) | 20 | 30 | 40 | 50 | 60 | 70 |
|---|---|---|---|---|---|---|
| $k_1$ | 1,00 | 0,96 | 0,92 | 0,78 | 0,74 | 0,70 |

**Switching Time**
When using dry Reed Switches in relays, contact bounce may occur.
Pull-in time (incl. bounce time) typ. 0,5...1,8 ms
at nominal voltage and 20 Hz
Drop-out time (with diode) typ. 0,5...1,5 ms
at nominal voltage and 20 Hz

**Comment**
Relay versions with 15 V nominal coil voltage are available upon request.

# REED RELAYS

## Customer Specific DIL-REED RELAYS

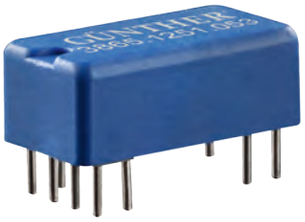

### Introduction

The customer specific Reed Relays are Dual-In-Line-Relays with standard housing height of 7,5 mm and a base area of 19 x 10 mm.These relays are potted with a permanent flexible plastic material subject to no mechanical force.

The advantage of the customer specific DIL-Reed Relays is that a wide variation of special pin configurations, contact arrangements and other applications can be realized. S.T.G. is thus able to produce the relay to meet special customer requirements.
Due to the small housing these relays can replace standard housing relays mounted on a PCB.

| **Version** | **Customer Specific Reed Relays in DIL-Housing** | |
|---|---|---|
| **Contact Form** | **1 Normally Open** | **2 Change Over** |
| **Type** | **3875 1342 ...**[1)] | **3865 1251 ...**[1)] |
| **Features** | - High insulation resistance | - Industry-standard<br>- Low input power |

**Coil Parameters**

| | | | | | | | | |
|---|---|---|---|---|---|---|---|---|
| Nominal coil voltage | | VDC | 5 | 12 | 24 | 5 | 12 | 24 |
| Pull-in voltage | max. | VDC | 3,8 | 9 | 18 | 3,8 | 9 | 18 |
| Drop-out voltage | min. | VDC | 1 | 2 | 4 | 1 | 2 | 4 |
| Operating voltage | max. | VDC | 12 | 20 | 40 | 7 | 16 | 30 |
| Coil resistance | ±10% | Ω | 320 | 1000 | 3200 | 100 | 500 | 2000 |

**Contact Parameters**

| | | | | |
|---|---|---|---|---|
| Switching capacity | max. | W/VA | 10 | 20 |
| Switching voltage | max. | V AC/DC | 230 | 100 |
| Switching current | max. | A | 0,5 | 1,0 |
| Carrying current | max. | A | 1,0 | 2,0 |
| Contact resistance | max. | mΩ | 150 | 150 |
| Dielectric strength | min. | VDC | 400 | 200 |

**Relay Parameters**

| | | | | |
|---|---|---|---|---|
| Dielectric strength | coil/contact | VDC | 4000 | 1000 |
| Insulation resistance | coil/contact | Ω | $10^{12}$ | $10^{10}$ |
| Storage temperature | | °C | -35...+100 | -35...+100 |
| Operating temperature | | °C | -20...+80 | -20...+80 |
| Pull-in time incl. bounce time max. | | ms | 1,0 | 1,5 |
| Drop-out time with diode | | ms | 0,4 | 1,0 |
| Dimensions | | page | 23 | 23 |
| Weight | | approx. g | 2,3 | 3,2 |
| Pin configuration<br>(top view) | | | 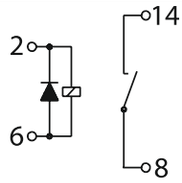 | 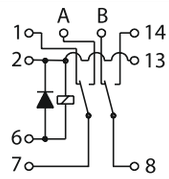 |

1) Also available with diode

## Customer Specific DIL-REED RELAYS

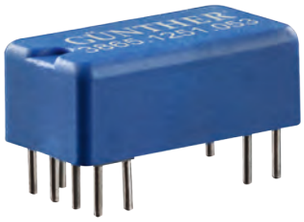


38.. .... ...

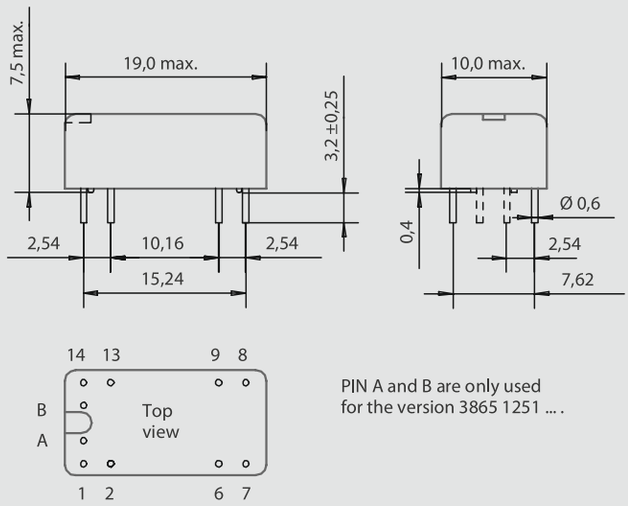


Dimensions in mm

**Pull-in and Drop-out Voltage, Coil Resistance**
The tolerances indicated are valid at 25 °C ± 3 °C. The temperature coefficient of the coil resistance is 0,4 % / °C.

**Switching Voltage, Current and Capacity**
The parameters as listed for switching voltage, current and capacity are maximum values. Exceeding any one of these values causes overload and reduces relay life expectancy.

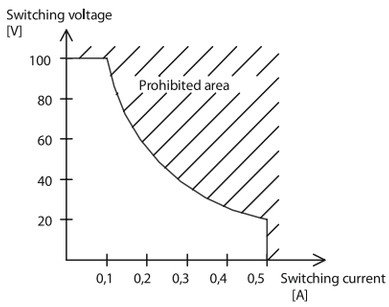


**Contact Resistance**
The contact resistance indicated is valid for new relays at nominal coil voltage. The four-point method at 2 VDC / 100 mA or 10 mA is applied.
Custom solutions for special applications, especially for switching signals smaller than 1 mV at 10 $\mu$A (low-level-applications) or applications requiring dynamic contact resistance measurement can be produced for special switching needs.

**Temperature Range**
The operating temperature of the relay is the equivalent of the internal temperature. If the relays are used in ambient temperatures ($\vartheta_a$) higher than 20 °C, the maximum permissible operating voltage ($U_T$) must be calculated according to the table indicated below, using the formula:
$U_T = U_{max} \times k_1$
(Umax = max. permissible operating voltage)

| $\vartheta_u$ (°C) | 20 | 30 | 40 | 50 | 60 | 70 |
|---|---|---|---|---|---|---|
| $k_1$ | 1,00 | 0,96 | 0,92 | 0,78 | 0,74 | 0,70 |

**Order Example:**

38 75 1342 05 1

Product group
Contact code
Standard type

Version
1 = without diode
3 = with diode

Nominal coil voltage
05 = 5V
12 = 12V
24 = 24V

During and immediately after the soldering process no mechanical stress should occur on the soldering pins.

**Customized special versions can be developed and manufactured pursuant to customer requirements.**

# PROXIMITY SENSORS

| | | Type | 4414 | 4414 | 4428 | 4428 | 4429 | 4429 | 4451 | 4451 | 4452 |
|---|---|---|---|---|---|---|---|---|---|---|---|
| | | | 1525 | 1625 | 1525 | 1625 | 3823 | 0551 | 2725 | 0551 | 2325 |
| **Parameters** | | | 121 | 121 | 111 | 111 | 111 | 111 | 311 | 311 | 311 |
| Contact Form | | | A | C | A | C | A | C | A | C | A |
| Switching Capacity | | W/VA | 80 | 60 | 80 | 60 | 60 | 3 | 10 | 3 | 10 |
| Switching Voltage | max. | VAC | 250 | 230 | 250 | 230 | 230 | 30 | 230 | 30 | 100 |
| Switching Current | max. | A | 1,3 | 1,0 | 1,3 | 1,0 | 3,0 | 0,2 | 0,5 | 0,2 | 0,5 |
| Carrying Current | max. | A | 2,0 | 2,0 | 2,0 | 2,0 | 4,0 | 0,5 | 1,0 | 0,5 | 1,0 |
| Dielectric Strength | | VDC | 800 | 400 | 800 | 400 | 400 | 150 | 400 | 150 | 200 |
| Contact Resistance | max. | mΩ | 80 | 100 | 80 | 100 | 80 | 100 | 100 | 100 | 150 |
| Connecting Wire | 2m | LIYY | 2 x 0,14 | 3 x 0,14 | 2 x 0,14 | 3 x 0,14 | 2 x 0,14 | 3 x 0,14 | 2 x 0,14 | 3 x 0,14 | 2 x 0,14 |
| Recommended Magnet | | | 4414 | 4414 | 4428 | 4428 | 4429 | 4429 | 4451 | 4451 | 4451 |
| Operating Distance | | mm | 10 – 20 | 10 – 20 | 10 – 20 | 10 – 20 | 10 – 20 | 10 – 20 | 10 – 20 | 10 – 20 | 5 – 10 |
| Operating Temperature | | °C | -40 … +150 | | | | | | | | |
| Housing Material | | | Polystyrol | Polystyrol | Polystyrol | Polystyrol | Polystyrol | Polystyrol | Polystyrol | Polystyrol | Polystyrol |

4414

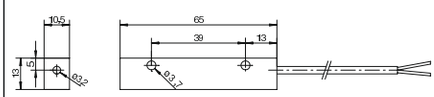


4428

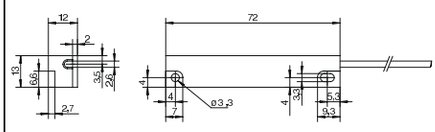


4429

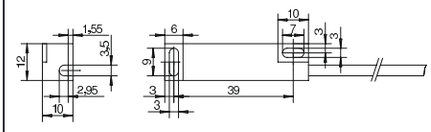


4451

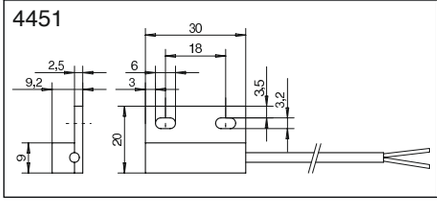


4452

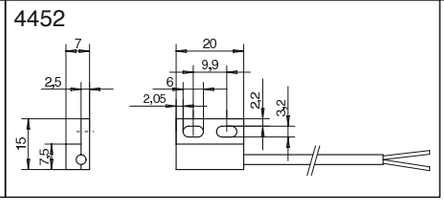


# MAGNETS

| Type | | 4414 | 4428 | 4429 | 4451 | 4452 | 4400 | 4400 | 4400 | 4400 | 4400 |
|---|---|---|---|---|---|---|---|---|---|---|---|
| | | 0830 | 0830 | 0830 | 0624 | 0515 | 0515 | 0618 | 0630 | 0815 | 0830 |
| | | 110 | 110 | 110 | 310 | 310 | 000 | 000 | 000 | 000 | 000 |
| With Housing | | o | o | o | o | o | | | | | |
| Housing Material | | Polystyrol | Polystyrol | Polystyrol | Polystyrol | Polystyrol | | | | | |
| Plain | | | | | | | o | o | o | o | o |
| Magnet Material | | Alnico | | | | | | | | | |
| Dimensions in | mm | See below | | | | | 5x15 | 6x18 | 6x30 | 8x15 | 8x30 |

4414M

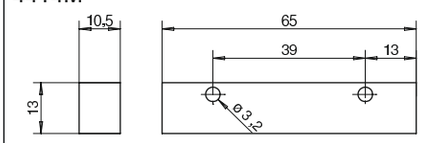


4428M

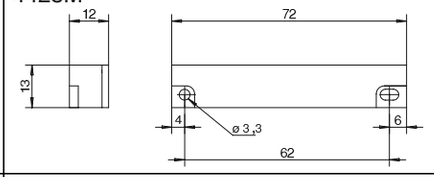


4429M

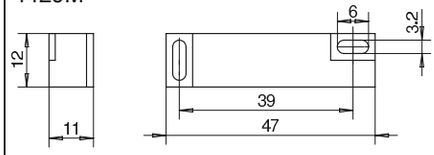


4451M

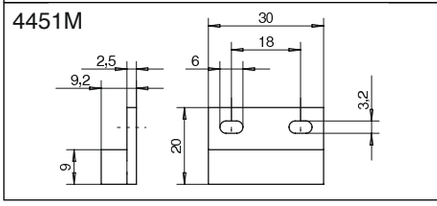


4452M

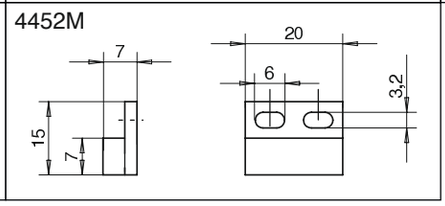

| Parameters | | Type | 4426 2325 121 | 4426 0551 121 | 4432 2725 321 | 4433 2725 321 | 4433 0551 321 | 4415 2325 321 | 4415 0551 321 | 4431 1525 021 | 4411 2725 021 | 4412 3823 021 |
|---|---|---|---|---|---|---|---|---|---|---|---|---|
| Contact Form | | | A | C | A | A | C | A | C | A | A | A |
| Switching Capacity | | W/VA | 10 | 3 | 10 | 10 | 3 | 10 | 3 | 80 | 10 | 60 |
| Switching Voltage | max. | VAC | 100 | 30 | 230 | 230 | 30 | 100 | 30 | 250 | 230 | 230 |
| Switching Current | max. | A | 0,5 | 0,2 | 0,5 | 0,5 | 0,2 | 0,5 | 0,2 | 1,3 | 0,5 | 3,0 |
| Carrying Current | max. | A | 1,0 | 0,5 | 1,0 | 1,0 | 0,5 | 1,0 | 0,5 | 2,0 | 1,0 | 4,0 |
| Dielectric Strength | | VDC | 200 | 150 | 400 | 400 | 150 | 200 | 150 | 800 | 400 | 400 |
| Contact Resistance | max. | mΩ | 150 | 100 | 100 | 100 | 100 | 150 | 100 | 80 | 100 | 80 |
| Connecting Wire | 2m | LIYY | 2 x 0,14 | 3 x 0,14 | 2 x 0,14 | 2 x 0,14 | 3 x 0,14 | 2 x 0,14 | 3 x 0,14 | 3 x 0,5 | 3 x 0,75 | 3 x 0,75 |
| Recommended Magnet | | | 6x18 | 6x18 | 8x30 | 8x30 | 8x30 | 8x30 | 8x30 | 8x30 | 11.1 | 11.2 |
| Operating Distance | | mm | 5-20 | 5-20 | 10-20 | 10-20 | 10-20 | 10-20 | 10-20 | 10-20 | 5-20 | 5-20 |
| Operating Temperature | | °C | - 40... + 150 | | | | | | | | | |
| Housing Material | | | Polystyrol | Polystyrol | Polystyrol | Polystyrol | Polystyrol | Polystyrol | Polystyrol | Brass | Alu | Alu |

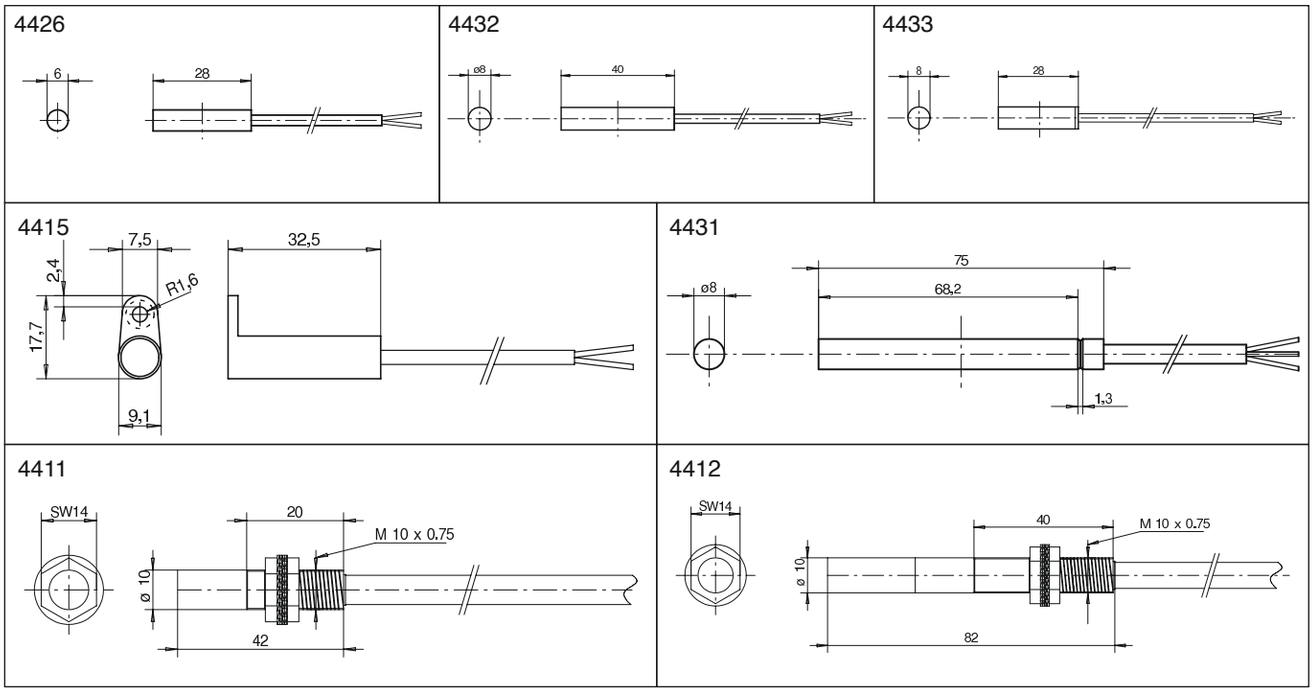


Blue is our standard colour for the highly shock-resistant polystyrene housing. Customized colours - clear, white, and brown - can be specially ordered. Standard cable length: 1m

**Ordering Information:**

44 51 2725 3 1 1

Product Group

Case Type

Sensor Type

Color:
- 0 = natural
- 1 = white
- 2 = brown
- 3 = blue
- 4 = clear

Connection Method:
- 0 = without cable
- 1 = with cable
- 2 = with soldering pins

Options:
- 0 = unencapsulated
- 1 = encapsulated
- 2 = potted

# SENSOR INCLINATION / ACCELERATION, DAMPENED

## PRODUCT DESCRIPTION

- Precision tilt or pendulum switch / sensor
- Applicable as e.g. acceleration sensor
- Variable switching angle depending on installation
- Hg-free
- Suitable to be soldered

## APPLICATION

Different applications, when an exact switching angle is required. The inclination setting can be adjusted directly on the circuit board or application. The oil damping makes the sensor insensitive to vibrations.

## TECHNICAL DATA

| | | |
|---|---|---|
| **Function** | | |
| Contact arrangement | | 1 FA / NO |
| Contact material | | Rh |
| Min. differential switching angle | | [°] 3 |
| **Electrical data** | | |
| Max. switching voltage | [V] | 100 |
| Max. switching current | [mA] | 400 |
| Max. carrying current | [mA] | 1000 |
| Max. switching capacity | [W/VA] | 10 |
| Max. contact resistance | [mOhm] | 300 |
| Min. insulation resistance | [Ohm] | $10^9$ |
| **Ambient conditions** | | |
| Operating temperature range | [°C] | -40...+125 |
| **Other features** | | |
| Weight (approx.) | [g] | 5 |

## ORDER NUMBER

5601.2003.201 (standard type)

## ACCESSORIES & SPECIALS

Sensor with connecting cords
We assist you with difficult applications!

## DIMENSIONS

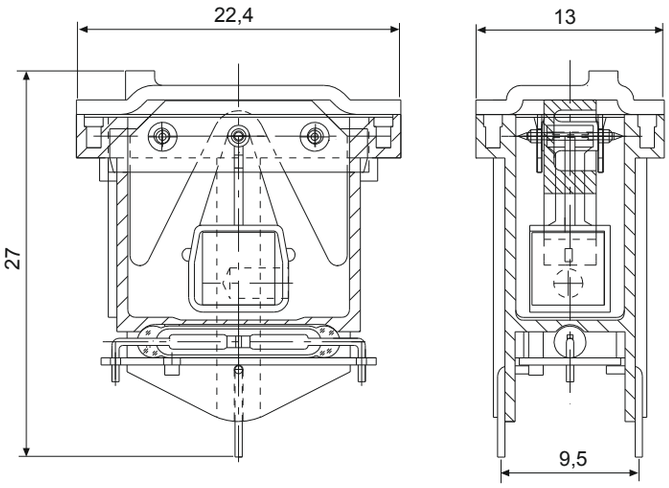


## FUNCTION

Tilt Switch:
At a specific angle, the reed switch is activated. By changing the position of the sensor on the object, the switching angle can be changed.

Acceleration sensor:
Acceleration will activate the pendulum. The switching activating point corresponds to a specific deflection ß and thus to a specific acceleration. The acceleration can be calculated according to the following formula:

$$a = \tan ß * g$$

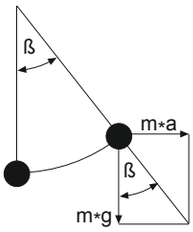


If the switching angle at a specific acceleration is needed, the following formula is applicable:

$$ß = \arctan a * g$$

ß = Switching angle
a = Acceleration
g = Gravity acceleration (9,81 m/s$^2$)

## RELATION ACCELERATION / ANGLE

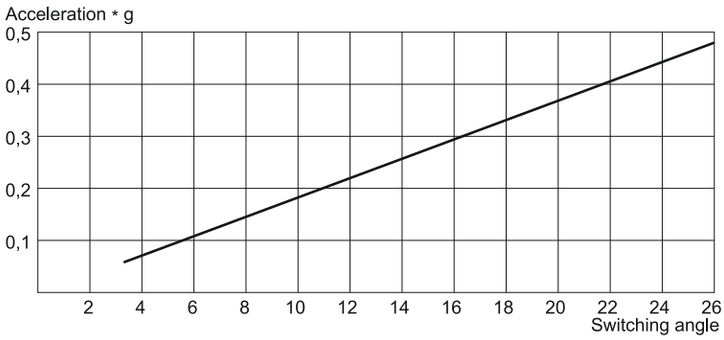


## PLEASE NOTE:

The inclination of the object influences the acceleration!

The sensor is filled with silicon oil!

Original size

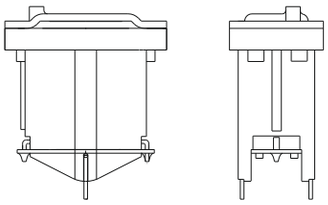

## PRODUCT DESCRIPTION

- Precision tilt or pendulum sensor
- Applicable as e.g. acceleration sensor
- Variable switching angle depending on installation
- Hg-free
- Suitable to be soldered

## APPLICATION

Different applications, when an exact switching angle is required. The inclination setting can be adjusted directly on the circuit board or application.

## TECHNICAL DATA

| | | | |
|---|---|---|---|
| Function | | | |
| | Contact arrangement | | 1 FA / NO |
| | Contact material | | Rh |
| | Min. differerential switching angles | | [°] 3 |
| Electrical data | | | |
| | Max. switching voltage | [V] | 100 |
| | Max. switching current | [mA] | 400 |
| | Max. carrying current | [mA] | 1000 |
| | Max. switching capacity | [W/VA] | 10 |
| | Max. contact resistance | [mOhm] | 300 |
| | Min. insulation resistance | [Ohm] | $10^9$ |
| Ambient conditions | | | |
| | Operating temperature range | [°C] | -40...+125 |
| Other features | | | |
| | Weight (approx.) | [g] | 2 |

## ORDER NUMBER

5601.2001.223 (standard type)

## ACCESSORIES & SPECIALS

Sensor with connecting cords.
We assist you with difficult applications.

## DIMENSIONS

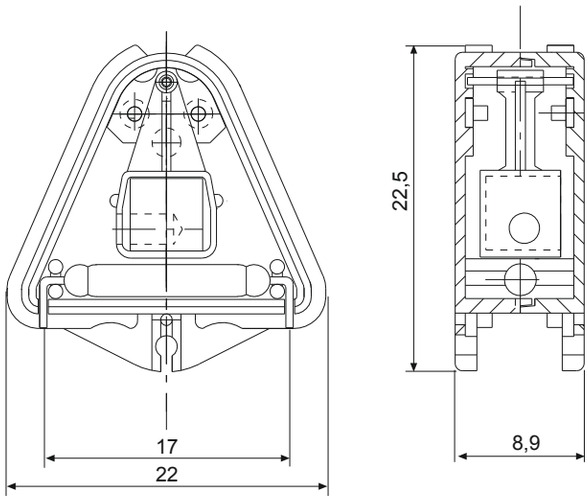


## FUNCTION

Tilt Switch:
At a specific angle, the reed switch is activated. By changing the position of the sensor on the object, the switching angle can be changed.

Acceleration sensor:
Acceleration will activate the pendulum. The switching activating point corresponds to a specific deflection ß and thus to a specific acceleration. The acceleration can be calculated according to the following formula:

$$a = \tan ß * g$$

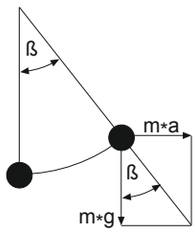


If the switching angle at a specific acceleration is needed, the following formula is applicable:

$$ß = \arctan a * g$$

ß = Switching angle
a = Acceleration
g = Gravity acceleration (9,81 m/s$^2$)

## RELATION ACCELERATION / ANGLE

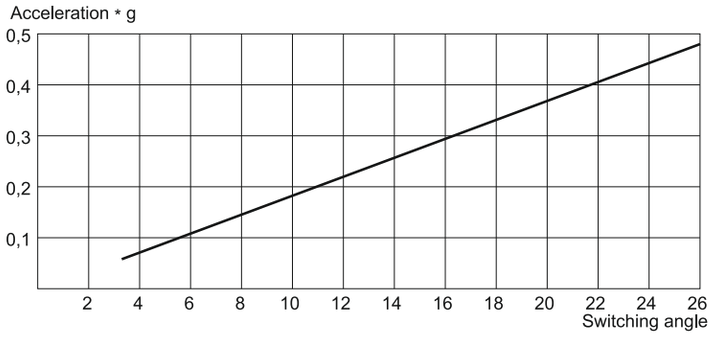


## PLEASE NOTE:

The inclination of the object influences the acceleration!
In case of vibrations, faults may occur!

Original size

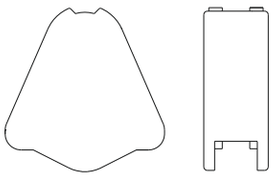


## S.T.G. GERMANY GMBH

Virnsberger Str. 51
D-90431 Nürnberg
Germany
Phone: +49 (0) 911 6552-0
Fax +49 (0) 911 6552-239
mail@stg-germany.de
www.stg-germany.de


## S.C. S.T.G. Switch Technology Guenther S.R.L.

Gheorghe Baritiu Str. 30
515400 Blaj / Alba
Romania
Phone: +40 (0) 258 711 600
Fax +40 (0) 258 711 161
www.stg-germany.de

All specifications and details given are subject to change without notice

10/2012